COP-Compact Peripherals

Hardware

User Manual

Revision: 4.52
Date: 11 February 2026
Language: English

Table of Contents

1. General ... 9

1.1. About This Manual ... 9
1.2. Distribution and Support ... 9
1.2.1. Manufacturer ... 9
1.2.2. Support ... 9
1.3. Disclaimer ... 9
1.4. Copyright ... 9
1.5. Documentation Revisions ... 10
1.6. Used Definitions ... 13
1.7. Used Symbols ... 13

2. Safety ... 14

2.1. Safety Notes ... 14
2.1.1. Qualified Personnel ... 14
2.1.2. Documentation ... 14
2.1.3. ESD Protection ... 14
2.1.4. EMC ... 14
2.1.5. Protection Against Contact with Electrical Parts ... 15
2.1.6. Liability ... 15
2.1.7. Damaged Modules ... 15
2.2. Intended Use ... 15

3. Handling ... 16

3.1. Storage ... 16
3.2. Repair Service ... 16
3.3. Disposal ... 16

4. COP - Indel Compact Peripheral ... 17

4.1. Overview of COP Modules ... 18
4.2. Accessories ... 22
4.2.1. Indel Components ... 22
4.2.2. Indel Assembly ... 24
4.3. Pin Identification ... 24
4.4. Module Assignment ... 26
4.5. COP Node Addressing ... 27
4.6. Addressing of Individual COP Modules ... 27

5. Electrical Wiring ... 28

5.1. Notes ... 28
5.2. COP Node Power Supply ... 28
5.2.1. Power Supply Principle ... 28
5.3. Wiring Regulations ... 29
5.3.1. COP Connector Current Rating ... 29
5.3.2. EMC ... 29

6. Mechanical Installation ... 30
6.1. Notes ... 30
6.2. Installation Regulations ... 30
6.2.1. Cooling and Distances ... 31
6.3. COP Case Dimensions ... 32
6.3.1. Case with 1 Slot ... 32
6.3.2. Case with up to 3 Slots ... 32
6.3.3. Case with up to 5 Slots ... 33
6.3.4. Case with up to 7 Slots ... 33

7. Environmental Conditions ... 34

8. COP-MAS2 (Master 2nd Generation) ... 35
8.1. Technical Specifications ... 35
8.1.1. Option 2x800M ... 35
8.1.2. Option 800M/LITE ... 36
8.2. Pin Assignment ... 37
8.3. Options Rotary Switch ... 38
8.4. Connection Examples ... 39
8.5. Available Options ... 39
8.6. Accessories ... 39

9. COP-MAS (Master) ... 40
9.1. Technical Specifications ... 40
9.2. Pin Assignment ... 41
9.3. Options Rotary Switch ... 42
9.4. Connection Examples ... 42
9.5. Available Options ... 43
9.6. Accessories ... 43

10. COP-PAS LEX (Passive Bus Coupler) ... 44
10.1. Technical Specifications ... 44
10.2. Pin Assignment ... 45

10.3. Options Rotary Switch 46
10.4. Available Options 46

11. COP-AX (Motor Output Stage) 47
11.1. Technical Specifications 47
11.2. Pin Assignment 50
11.3. Connection Examples 51
11.4. Available Options 57

12. COP-AX2 72V (Motor Output Stage) 58
12.1. Technical Specifications 58
12.2. Pin Assignment 60
12.3. Connection Examples 61
12.4. Available Options 67

13. COP-SSI (Encoder Module) 68
13.1. Technical Specifications 68
13.2. Pin Assignment 69
13.2.1. Incremental encoder feedback pin assignment 69
13.2.2. SSI pin assigment 69
13.3. Hardware Description 70
13.3.1. Available Options 70

14. COP-SL2 (Galvanometer-scanner control interface) 71
14.1. Technical Specifications 71
14.2. Pin Assignment 72
14.3. Connection Examples 73
14.4. Available Options 73

15. COP-SHC (Laser scanner control interface) 74
15.1. Technical Specifications 74
15.2. Pin Assignment 76
15.3. Connection Examples 77
15.4. Available Options 79
15.5. Accessories 79

16. COP-ADA (Analogue IO) 80
16.1. Technical Specifications 80
16.2. Pin Assignment 82
16.3. Connection Examples 83
16.4. Available Options 83

17. COP-DEND (wire final checking) ... 84
17.1. Technical Spezifications ... 84
17.2. Pin Assignment ... 84
17.3. Hardware Description ... 84
17.4. Available Options ... 85

18. COP-ADA-PULS (Analogue IO/Digital IO/Pulsator) ... 86
18.1. Technical Specifications ... 86
18.2. Pin Assignment ... 88
18.3. Pulse Output Specifications ... 89
18.3.1. Delay Times ... 90
18.4. Hardware Description ... 91
18.5. Available Options ... 92

19. COP-IO (Digital IO) ... 93
19.1. Technical Specifications ... 93
19.2. Pin Assignment ... 94
19.3. Hardware Description ... 94
19.4. Available Options ... 95

20. COP-IIO (Isolated Digital IO) ... 96
20.1. Technical Specifications ... 96
20.2. Pin Assignment ... 97
20.3. Hardware Description ... 97
20.4. Available Options ... 97

21. COP-PTC (Peltier Output Stage) ... 98
21.1. Technical Specifications ... 98
21.2. Pin Assignment ... 99
21.3. Hardware Description ... 99
21.4. Connection Examples ... 100
21.5. Available Options ... 100

22. COP-MC2 (Moving Coil Controller) ... 101
22.1. Technical Specifications ... 101
22.2. Pin Assignment ... 102
22.3. Connection Examples ... 102
22.4. Available Options ... 102

23. COP-PVC (Programmable Power Source) ... 103
23.1. Technical Specifications ... 103

23.2. Pin Assignment 104
23.3. Available Options 104
23.4. Accessories 104

24. COP-PIEZO (Piezo Output Stage) 105
24.1. Technical Specifications 105
24.2. Pin Assignment 106
24.3. Low Voltage 106
24.4. Connection Examples 107
24.5. Available Options 107

25. COP-SIO (Serial IO Interfaces) 108
25.1. Technical Specifications 108
25.2. Pin Assignment 109
25.3. Connection Examples 109
25.4. Available Options 110

26. COP-LVDS (Low Voltage Differential Signaling Interface) 111
26.1. Technical Specifications 111
26.2. Pin Assignment 112
26.3. Available Options 112

27. COP-HIL (Hilscher Module) 113
27.1. Technical Specifications 113
27.2. Pin Assignment 114
27.3. Available Options 114

28. COP-LCR (Measuring Bridge for L, C and R) 115
28.1. Technical Specifications 115
28.2. Notes on the Use 117
28.3. Maintenance and Calibration 117
28.4. Pin Assignment 117
28.5. Available Options 117

29. COP-IT (Thermocouple/Pulsator/PWM/LVDT) 118
29.1. Technical Specifications 118
29.2. Pin Assignment 120
29.3. Hardware Description 120
29.4. Connection Examples 122
29.5. Available Options 123

30. COP-VC8 (Directional Valve Control) 124
30.1. Technical Specifications 124
30.2. Pin Assignment 125
30.3. Valve Output Specification 126
30.4. Available Options 126

31. COPx-AX4 (Motor Output Stage for 4 Axes) 127
31.1. Technical Specifications 127
31.2. Pin Assignment 129
31.3. Connection Examples 130
31.4. Available Options 131

32. COPx-ADIO (Digital IO/PWM/PT100/Analogue Input/LVDT) 132
32.1. Technical Specifications 132
32.2. Pin Assignment 134
32.3. Hardware Description 135
32.4. Available Options 138

33. COP-Proto-S6 (Prototype Board) 139
33.1. Technical Specifications 139
33.2. Use and Warranty 140
33.3. Pin Assignment 140
33.4. Diagram 141
33.5. Available Options 141

1. General

1.1. About This Manual

This user manual describes the hardware of Indel COP-peripherals.

1.2. Distribution and Support

1.2.1. Manufacturer

Indel AG
Tuefiwis 26
CH-8332 Russikon
Switzerland

info@indel.ch
www.indel.ch

Phone: +41 44 956 20 00

1.2.2. Support

Indel AG offers you comprehensive technical support:

- hardware and software engineering
- technical support via TeamViewer all over the world
- on-site commissioning of control systems and drives

1.3. Disclaimer

The documentation has been compiled to the best of our knowledge and belief. The described products, however, are subject to continuous development and improvement. Therefore, the documentation should never been deemed complete. All information contained in the documentation is provided without any guarantee. We reserve the right to make any changes, at any time and without prior notice. No claims may be made based on any changes to already delivered products.

1.4. Copyright

© Indel AG

It is forbidden to disclose and reproduce this document without express permission from Indel.

1.5. Documentation Revisions

Revision	Date	Author	Comment
Rev 4.00	05.11.2013	M Suter	• New version of the COP user manuals
Rev 4.01	28.11.2013	M Suter	• Section 8.3 Options rotary switch for the COP-MAS2 added • Section 9.3 Options rotary switch for the COP-MAS added
Rev 4.02	19.02.2014	M Suter	• Section Handling added
Rev 4.03	24.04.2014	M Suter	• Section COP-MAS2 Interfaces updated
Rev 4.04	20.05.2014	M Suter	• COP-AX Parallel Circuit Connection Examples
Rev 4.05	27.05.2014	M Suter	• Section 5.2, the COP-MAS2 LITE can also be used as a Gin-Link Master
Rev 4.06	09.07.2014	M Suter	• Card numbers added • DC motor connection example for the COP-AX
Rev 4.07	28.07.2014	M Suter	• Switched to interactive PDF format
Rev 4.08	17.09.2014	M Suter	• COP-PIEZO slew-rate corrected from 150 V/ms to 30 V/ms • PULS outputs of the COP-ADA-PULS power supply extended by an internal diode
Rev 4.09	06.10.2014	M Suter	• COP-AX connection example, synchronous motor at two parallel output stages, phases V and W interchanged
Rev 4.10	22.04.2015	M Suter	• Section 4.2.1, 1 slot of the COP case added
Rev 4.11	06.09.2016	M Bleuler	• Section 4.2.1, COP connector with ejector aid deleted and an item number at the COP cover updated
Rev. 4.20	03.04.2016	F Baschung	• Converted into Word, new Indel logo
Rev. 4.21	23.05.2017	D Richle	• COPx-ADIO and COPx-AX4 added
Rev. 4.22	24.05.2017	V Züllig	• COP-AX2 added. COP-AX/2 connection example, synchronous motor corrected
Rev. 4.23	06.06.2017	C Leuthold	• COP-PAS HW rev A with LEX option • COP-MAS2 RS422/485 pin assignment corrected (X5 and X10) • WWW links updated
Rev. 4.24	12.06.2017	D Richle	• COP-ADA-PULS: HW description of the digital outputs corrected • COP-MAS/MAS2 GIN-OUT jack X8 function associated with the Options Rotary Switch section
Rev. 4.25	13.06.2017	D Richle	• COP-LCR added • Font corrected • Heading names updated • COP-MAS2 GinLink Master interfaces supplemented with RS422/RS485 and TTL
Rev. 4.26	15.06.2017	D Richle	• COP-LCR supplemented with the Note on the Use and Maintenance and Calibration sections
Rev. 4.27	26.06.2017	D. Richle	• COP-LCR picture added in section 28 • Connection examples for Hiperface, EnDat2.1, SSI added to COP-AX/AX2 in section 11.3. and 12.3.

Revision	Date	Author	Comment
Rev 4.28	11.07.2017	D. Richle	· Correction of COP-AX/AX2 connection example for SSI feedback in section 11.3 and 12.3.
Rev 4.29	18.07.2017	D. Richle	· Correction of various typing and formatting errors
Rev 4.30	07.08.2017	D. Richle	· Specified amount of COP-AX/X2 modules per COP node in section 11 and 12 · Specification of COP-MAS/MAS2 for motor control in section 11 and 12 added.
Rev 4.31	24.08.2017	M. Bleuler D. Richle	· Correction of various translation terminologies in order to meet Indel vocabulary
Rev 4.32	01.09.2017	D. Richle	· Reorganization of the chapters · Section 22 COP-MC2 added · Section 26 COP-LVDS added
Rev 4.33	04.10.2017	D. Richle	· Cross-reference to section 7 in the document corrected. · Ext_En at Pin Assignment filled in section 11.2 · Attention added: Ext_En not considered STO in section 11and section 12 · Changed Brake to Ballast in section 11.2 and 12.2 · Connection examples measuring bridge corrected in section 16.3 · Rotary switch options added in COP-PAS LEX in section 10.3
Rev 4.34	22.12.2017	D. Richle	· Section 14 COP-SL2 added · COP-IT range of measuring bridge and the range of LVDT measuring expanded to ± 0.01V in section 29
Rev 4.35	06.04.2018	D. Richle	· Section 11, section 12 and section 30 · Remark about rotary switch addresses in COP nodes added. · Remark about external motor brake and Hall sensors added.
Rev 4.36	05.06.2018	D. Richle	· Entire document grouped style removed · Formatting checked · Cover picture added · Unified designations in the connection examples
Rev 4.37	27.09.2018	D. Richle	· COP module pictures replaced by render pictures · COP-SHC chapter added
Rev 4.38	14.02.2019	M. Bassotti M. Bleuler	· COP-LCR measurement accuracy adjusted in section 27.1. · COP-SHC introductory text in section 15 reformulated.
Rev 4.39	26.04.2019	M. Bleuler	· Added pictures of 5 and 3 nodes in section 4.
Rev 4.40	13.06.2019	V. Zuellig	· COP-PTC pin assignment X2 corrected
Rev 4.41	19.06.2019	V. Zuellig	· COP SHC item number updated
Rev 4.42	16.07.2019	V. Zuellig	· COP-AX: external motor brake removed
Rev 4.43	26.10.2020	C.Leuthold	· COP-IT: Trigger and PWM-Flasher removed, replaced with PWM · COP-PTC: PWR Outputs renamed, Discription adjusted

Rev 4.44	09.11.2020	S. Bärtschi	· COP-ADA : Added analog in/out accurancy infos
Rev 4.45	13.11.2020	S. Bärtschi	· COP-DEND: Product added
Rev. 4.46	07.12.2020	M. Bleuler	· RJ-45 sockets under pin assignment COP-MAS2 and COP-PAS LEX turned by 180°. · EtherNet/IP Master and Slave added under technical specifications COP-HIL.
Rev. 4.47	08.03.2021	S. Bärtschi	· COP-PTC: Corrected Temperature Measurement Range: New up to 460°C
Rev. 4.48	17.09.2021	M. Bleuler	· COP-VC8: Product added · Correction of Sincos interpolation Resolution from 10 Bit to 12 Bit in section 11.1 and 12.1
Rev. 4.49	18.11.2021	M. Bleuler	· Pin numbering X1 (RJ12) changed in chapter 8.2
Rev. 4.50	16.05.2022	M. Bleuler	· Switching threshold in chapter 20.1 adjusted from 10 ±10% V_{DC} to 12 ±10% V_{DC}.
Rev. 4.51	16.04.2024	M. Fischer	· 1.2.1 Fax no. deleted · 6.3.2 – 6.3.5 Correction Case Slot text · 17 COP-DEND Foto added, corrections of text
Rev. 4.52	11.02.2026	M. Fischer	· 11.1, 12.1, 31.1 COP-AX, COP-AX2, COPx-AX4 minimum intermediate circuit voltage added, · Link adjusted, various corrections

1.6. Used Definitions

Definition	Meaning
COP	Indel Compact Peripherals
COP node	A module node consisting of at least one master (COP-MAS2, COP-MAS or COP-PAS) and up to six peripheral modules
INCO	Indel-specific software interface for communication between the computer and Indel hardware
Compact control system	A COP node that operates on a standalone basis. The application software runs then on a COP-MAS or COP-MAS2
COP modules	Individual COP cards
COP slot	A COP module slot in the COP case
COP case	Housing for COP modules or a COP node
COP slave module	Slave modules. All COP peripheral modules except for master modules and bus couplers (COP-MAS, COP-MAS2, COP-PAS)
Maximum power consumption at 24V node power supply	Power consumption of one module in relation to the 24V power supply of the whole COP node
Earth	Grounding or protective conductor
Shield	Shield or ground connection for the cable shielding

1.7. Used Symbols

	Important user remark The symbol stands for important user remarks, which should all be followed.
ATTENTION	Attention The symbol stands for information the non-observance of which may lead to bodily injury and/or property damage.
DANGER	Danger The symbol stands for information the non-observance of which may lead to bodily injury due to electricity.
WWW	Hyperlink It stands for a hyperlink to a file or information on the Web.

2. Safety

2.1. Safety Notes

No claim is made that the following safety notes are complete. Please contact us if you have any questions, doubts or problems.

2.1.1. Qualified Personnel

Works such as transport, assembly, installation, commissioning, support and maintenance may only be carried out by qualified personnel. Applicable national accident prevention regulations should be complied with.

2.1.2. Documentation

Before proceeding with the installation and commissioning, please read thoroughly this and all referenced documentation. Improper handling may result in bodily injury or property damage. Please absolutely observe the technical specifications and all the information regarding the connection and environmental conditions.

2.1.3. ESD Protection

The modules contain electrostatically sensitive components that may become damaged due to improper handling. Please discharge your body before you touch any of the modules. Avoid contact highly-insulating materials (synthetic fibre, plastic films, etc.). After de-energising the modules, place them on a conductive pad. Do not touch the connector pins of the modules, any connected cables or strip conductor terminals.

2.1.4. EMC

For EMC-compliant wiring, please see the INDEL Wiring Guideline and the INDEL Fitting Guideline as well as all the wiring tips contained in this document. Some additional EMC measures should be taken if Indel COP modules are to be installed in residential premises.

WWW INDEL Wiring Guideline

WWW INDEL Installation Guidelines (in German available only)

2.1.5. Protection Against Contact with Electrical Parts

Some COP modules carry low voltages, i.e. higher than $50V_{AC}/75V_{DC}$. Contact with low voltages may result in life-threatening electrical shocks. There is a risk of death or severe damage to health.

Before switching on the unit, always make sure that it is properly connected to the PE conductor. Earth should always be connected, even if the node is only activated for a short time.

Before energising live parts carrying more than $50V_{AC}/75V_{DC}$, take appropriate measures to protect them against direct contact.

Never disconnect any electrical connections of the modules while they are powered. Light arcs, which are harmful to people and property, may occur under unfavourable conditions.

2.1.6. Liability

Basically, Indel COP modules are not fail-safe. In case of a breakdown, it is the responsibility of the operator to bring the machine/plant into a safe state. The operator is responsible for ensuring the safety.

2.1.7. Damaged Modules

Damaged COP modules must on no account be activated, as this might result in property damage or bodily injury. Any defective modules can be returned to Indel for repairs.

2.2. Intended Use

- COP modules may only be used as part of the specific plants described in this and the referenced documents.
- COP modules are intended for integration into stationary electrical machines/plants that are compliant with the Low-Voltage and the EMC Directives.
- The intended use is forbidden until the machine or plant is found to comply with the provisions of
  - the EC EMC Directive (2004/108/EC),
  - the Low-Voltage Directive (2006/95/EC) and
  - the Machinery Directive (2006/42/EC) or subsequent revisions thereof
- Otherwise Indel COP modules must not be marketed.
- The distributor of COP modules must check whether or not its machine/plant is subject to any further standards.
- The environmental conditions specified in section 7 must be absolutely ensured. To keep the ambient temperature and that of the control cabinet below 40°C, it may be necessary to take ventilation or cooling measures.

3. Handling

3.1. Storage

The COP modules can be stored under the prescribed environmental conditions without further restrictions.

3.2. Repair Service

Any repairs to COP modules must be carried out by the manufacturer. Indel control components can be returned to Indel for repairs. Repaired components are restored to their condition at the time of the original delivery. The application software and configurations are deleted.

3.3. Disposal

COP modules and their mechanical components are made from the following materials:

- steel housings
- aluminium cooling elements
- electronic PCBs

Individual components must be properly disposed of. All COP modules can be returned to Indel AG for professional disposal. The transport costs are paid by the sender.

4. COP - Indel Compact Peripheral

The compact Indel COP system consists of an active or passive bus coupler and up to six individual COP modules. This allows for optimal adaptability to specific customer needs.

A COP node can be either operated as a compact control unit with its own application or incorporated into a GinLink system.

The COP node is powered via master module using a 24V logic power supply.
The COP modules are accommodated and installed in an EMC tight housing made from chrome steel.

Various standard modules are available such as digital I/Os, isolated I/Os, analogue I/Os, feedback modules, motor output stages, special customer-specific modules, etc.

Due to their high flexibility, standard modules can be combined with customer-specific boards so that perfect adjustment can be achieved.

In addition, the development of customer-specific boards becomes even easier since only the specific part still needs to be developed. The cost of customisation is thus dramatically reduzed.

4.1. Overview of COP Modules

Indel's COP peripheral offers a large variety of standard modules, which are already in use.

Label	Option	Item Number	Description
COP-MAS2 section: 8	2x800M	611347505	Master (2nd generation) • 800MHz dual core ARM Cortex-A9 processor • Stand-alone • GinLink Master or GinLink Slave • Fieldbus coupler with decentralised computing power
	800M/LITE	611347500	Master (2nd generation) • 800MHz single core ARM Cortex-A9 processor • Stand-alone • GinLink Master or GinLink Slave • Fieldbus coupler with decentralised computing power
COP-MAS section: 9	GinMaster	610940810 *no longer available, but possibly still repairable*	Active master • 330MHz PPC • Stand-alone • GinLink Master • Fieldbus coupler with decentralised computing power
	GinSlave	610940800 *no longer available, but possibly still repairable*	Active master • 330MHz PPC • Stand-alone • GinLink Slave • Fieldbus coupler with decentralised computing power
COP-PAS section: 10		611143600 *no longer available, but possibly still repairable*	Passive GinLink fieldbus coupler
	LEX	611143630	Passive GinLink fieldbus coupler and GinLink expander
COP-AX section: 11		611145800	Motor output stage • Up to two motors per module • Up to 48V • Stepper motors • DC motors • Servo motors • Incremental encoder feedback • SinCos feedback • Resolver (only on request)

Label	Option	Item Number	Description
COP-AX2 section: 12	72V	611552900	Motor output stage • Up to two motors per module • Up to 72V • Stepper motors • DC motors • Servo motors • Incremental encoder feedback • SinCos feedback
COP-SSI section: 13		611143000	Six universal encoder inputs • Incremental encoder • SSI inputs • Counter
COP-SL2 section: 14		611143070 *no longer available, but possibly still repairable*	SL2-100 Interface • 1x Interface for Galvanometer-Scanner from Scanlab • 3x Channels for X, Y and Z • 3x RS422 Interfaces
COP-SHC section: 15	HSSI	611855720	• 1x HSSI protocol • 3x channels for X, Y and Z • 1x RJ-45 Interface • 1x RS485 Interface • 2x Fast digital inputs or outputs • 2x digital input for 5V and 24V • 1x Power supply 5V and 24V for pilot laser
	SL2	611855740	• 1x SL2-100 protocol • 3x channels for X, Y and Z • 2x RJ-45 Interface • 1x RS485 Interface • 2x Fast digital inputs or outputs • 2x digital input for 5V and 24V • 1x Power supply 5V and 24V for pilot laser
COP-ADA section: 16		611042130	Fast analogue I/Os • Eight analogue inputs • Eight analogue outputs
COP-ADA-PULS section: 17		611042900	Universal module • Four high-resolution pulsators • Four digital 24V outputs • Eight digital 24V inputs • Four analogue inputs • Four analogue outputs
COP-IO section: 19		611042400	Digital I/Os • Sixteen digital 24V outputs • Sixteen digital 24V inputs
COP-IIO section: 20		611246500	Isolated I/Os • Twelve isolated outputs • Twelve isolated inputs

Label	Option	Item Number	Description
COP-PTC section: 21	2x5A	611143400	Peltier temperature controller • Two channels of up to 48V and 5A per channel • Four PT100 inputs
	1x10A	611143410	Peltier temperature controller • One channel of up to 48V and 10A • Four PT100 inputs
COP-MC2 section: 22		611143440	Moving coil controller • Two ± $5A_{DC}$ or one ± $10A_{DC}$ output stages
COP-PVC section: 23		611143800	Adjustable power supply • One power output • 0...50V • Peak current up to 15A
COP-PIEZO section: 24		611346900	Piezo output stages • Two output stages • Internal step-up circuit • Total continuous output: 5W
COP-SIO section: 25		611246100	Serial interface • Four RS232 or RS422/RS485 Interfaces
COP-LVDS section: 26		611144500	LVDS Interface •
COP-HIL section: 27		611143100	Carrier board for Hilscher modules • Master Ethercat • Slave Ethercat • Master Profinet I/O • Slave Profinet I/O • Master Profibus DP • Slave Profibus DP • Master CANopen • Slave CANopen • Master DeviceNet • Slave DeviceNet
COP-LCR section: 28		611246300	Measuring bridge for L, C, R and diode • One measuring input
COP-IT section: 29		611144600	Universal module • Two high-resolution pulsators • Six PWM outputs (LED) • Two measuring bridges • Four thermocouples with temperature compensation • Two LVDT sensors
COPx-AX4 section: 30		611653900	• Four motor output stages, • PM, DC motors • Encoder feedback

Label	Option	Item Number	Description
COPx-ADIO section: 32		611653800	Universal module in COPx format • Two pulse outputs with 1us resolution • Three PWMs (LED) • Eight digital inputs • Sixteen digital outputs • Two PT100 • Eight analogue inputs • One LVDT
COP-Proto-S6 section: 33		611143700	Prototype board • Forty-eight I/Os from Xilinx's Spartan-6 FPGA

4.2. Accessories

4.2.1. Indel Components

The following COP platform accessories can be ordered directly from Indel.

Item Number	Label	Description	
611143210	COP case	COP case, 1 slot	
611143203	COP case	COP case, 3 slots	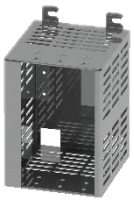
611143200	COP case	COP case, 5 slots	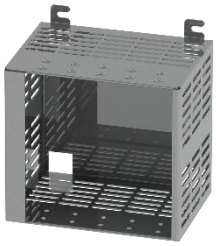
611143207	COP case	COP case, 7 slots	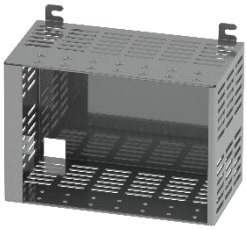

Item Number	Label	Description	
611144020	COP connector	One 2x12 contact strip, DFMC 1,5/12-ST-3,5-LR Phoenix Contact	
611143240	COP cover	One dummy plate to cover an empty slot	
610839800	RJ-12 SIO adapter	SIO adapter cable between RJ-12 and D-Sub male, 20cm long	

4.2.2. Indel Assembly

By default, COP modules are delivered separately and unassembled. If you need a node to be assembled and finally tested, you can order that via COP Item Assembly. The customer is then required to provide the following additional information:

- what modules are built into the node concerned
- how such modules are addressed within the COP node

To order COP assembly, please enclose a COP Assembly Addendum with your purchase order. The form is available from the documentation section of the website.

WWW COP Assembly Addendum

You can also order customer-specific items. This is useful, for example, when a mass-produced COP node has the same configuration. For this purpose, please fill out and return the Customer-Specific COP Item Assembly Addendum to Indel.

WWW Customer-Specific COP Item Assembly Request

4.3. Pin Identification

The following pin identifications are implemented and used throughout the document.

Function	Identification	Direction	Remarks
Digital 24V Input	D	In	With regard to GND
Digital 24V Output	D	Out	Digital 24V output, separate power supply (Vcc IO)
Isolated digital Input	+D	In	Galvanically isolated input
Isolated digital Input	-D	In	Galvanically isolated input
Isolated digital Output	+D	Out	Galvanically isolated output
Isolated digital Output	-D	Out	Galvanically isolated output
Analogue Input	A	In	With regard to GND
Analogue Output	A	Out	With regard to GND
Analogue Input	+A	In	Differential
Analogue Input	-A	In	Differential
5V power supply for external peripherals	+5V	Out	With regard to GND
24V power supply for external peripherals	+24V	Out	With regard to GND
Power supply for output drivers	Vcc IO	In	24V, with regard to GND
Earth	Shield		Shield, earthing
Earth	Earth		Earthing
Ground	GND		0V board power supply has the same potential as GND

Function	Identification	Direction	Remarks
Incremental encoder 0 input A+	Inc 0 A+	In	Incremental encoder track A
Incremental encoder 0 input A-	Inc 0 A-	In	Incremental encoder track A
Incremental encoder 0 input B+	Inc 0 B+	In	Incremental encoder track B
Incremental encoder 0 input B-	Inc 0 B-	In	Incremental encoder track B
Incremental encoder 0 input N+	Inc 0 N+	In	Incremental encoder reset pulse
Incremental encoder 0 input N-	Inc 0 N-	In	Incremental encoder reset pulse
Input for thermocouple elements	+TC	In	
Input for thermocouple elements	-TC	In	
Power supply for external measuring bridges	+Vcc_MB	Out	
Power supply for external measuring bridges	-Vcc_MB	Out	
Feedback for measuring bridge power supply	+FB_MB	In	MB power supply measurement for voltage control
Feedback for measuring bridge power supply	-FB_MB	In	MB power supply measurement for voltage control
Feedback measuring bridge	+MB	In	Measuring bridge for analysis
Feedback measuring bridge	-MB	In	Measuring bridge for analysis
Pulsator power supply output	+/- Vcc_PULS	In	
Pulsator output	PULS	Out	
Motor temperature	MTmp	In	Input for the motor temperature sensor
Intermediate circuit power supply	Mot_Ucc	In	Feeding or tapping of intermediate circuit power supply
SinCos Interface	Sin+ 0	In	Input for the SinCos interface
Generator output for resolvers	GEN+ 0	Out	
Motor final stage terminal	Mot 0 U	Out	Motor phase U
Motor final stage terminal	Mot 0 V		Motor phase V
Motor final stage terminal	Mot 0 W		Motor phase W
Motor final stage terminal	Mot 0 X		Motor phase X (stepper motor)
Reference input	Ref+	In	Reset pulse output
Reference input	Ref-	In	Reset pulse output
External brake resistor input	Ballast	In	Connect brake resistor between Ucc and ballast.

4.4. Module Assignment

The figure below shows how a COP node is identified in a COP case with a total of 5 slots. Depending on the use, slot 0 houses an active master or a passive bus coupler.

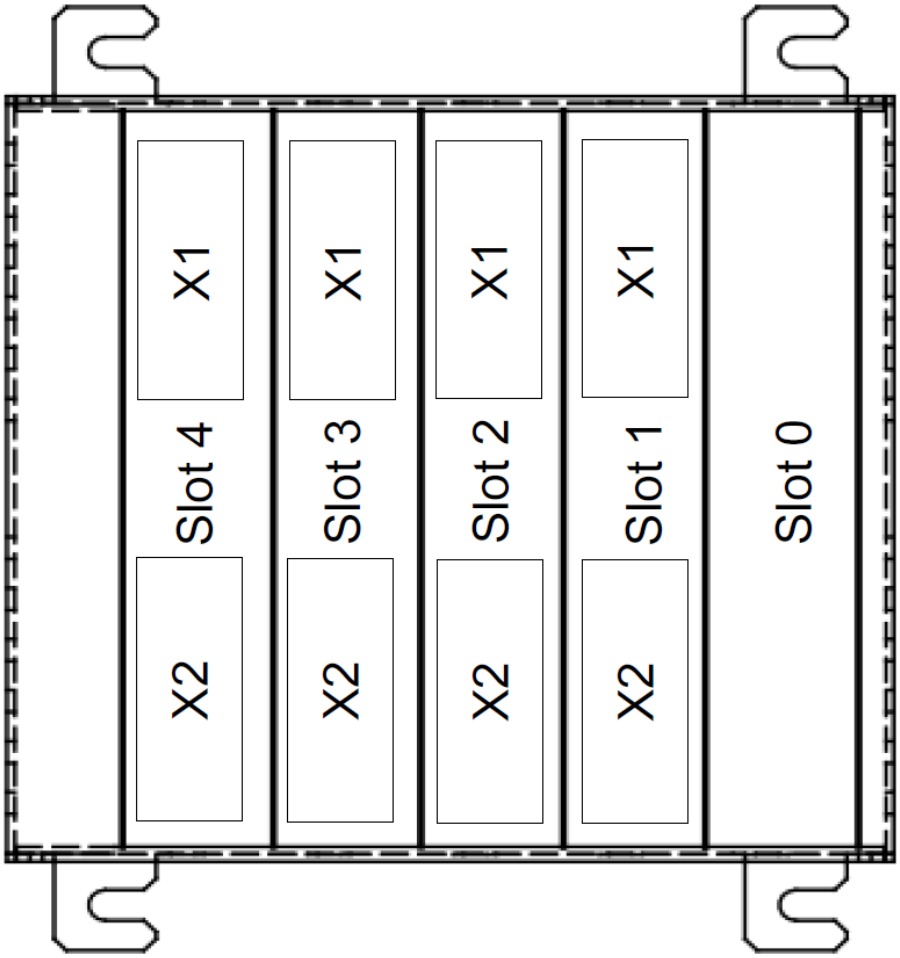

4.5. COP Node Addressing

COP nodes are addressed in various ways, depending on how they are going to be used. The node is either incorporated into a GinLink system or operates as a compact stand-alone control unit. When booting the master, you can adjust various settings using the options rotary switch.

More details on how to address COP-MAS2: see section 8.3 on page 32. More details on how to address COP-MAS: see section 9.3 on page 36.

4.6. Addressing of Individual COP Modules

Each COP slave module is equipped with an address adder. Each module used within a node needs to have a unique address within ranging from 0x0 to 0x7.

If a COP node contains COP-AX/AX2 modules or COPx-AX4 modules, further addressing requirements apply. See related sections.

The individual addresses of individual modules must match the software project.

5. Electrical Wiring

5.1. Notes

Applicable national accident prevention regulations should be observed.
The electrical wiring is to be made in accordance with applicable national laws (wire colours, wire cross-sections, protections, protective conductor terminals, EMC, etc.).

5.2. COP Node Power Supply

The COP node must be supplied with 24V$_{DC}$ voltage.

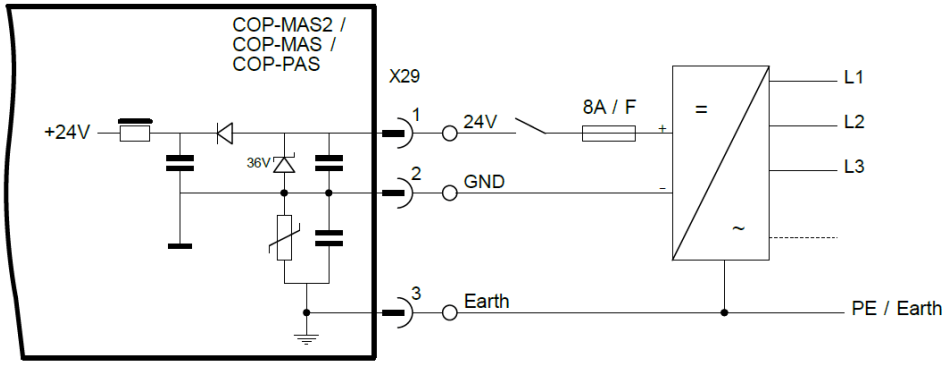

5.2.1. Power Supply Principle

The COP node must be supplied with 24VDC voltage. Master modules COP-MAS2, COP-MAS and COP-PAS have integrated 5V and 3.3V power supply units.
Power is supplied to all other slave modules via COP bus. If required, further power supply is locally generated by each module on its own. The modules are earthed via COP case.

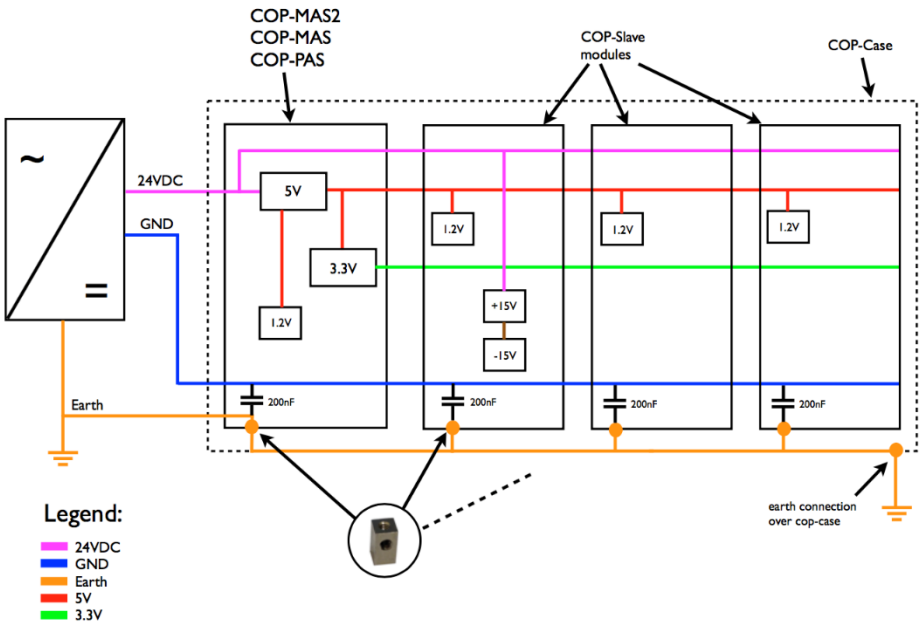

5.3. Wiring Regulations

All cables with signal wires and connected loads must be shielded. They include:

- analogue signals
- counter signals
- digital signals with signal levels higher than 24VDC
- motor cables, PWM outputs, Peltier elements

5.3.1. COP Connector Current Rating

The maximum power loads of Wago and Phoenix connectors per pin are as follows:

- Wago 713-1112/037-9037/034-000: 6A
- Phoenix Contact - DFMC 1.5/12-ST-3.5-LR: 8A

For higher power loads, two terminal pins must always be parallelly wired.

5.3.2. EMC

Shielded cables must be connected to earth directly before the COP case with a fully contacting strap. Inductive loads such as contactors, solenoid valves, etc. should be wired with a screening unit (RC module, diode, ZNR).

Compliance with the following standards is ensured by Indel only if Indel's COP case housing is used.

- EN 61000-6-2
- EN 61000-6-4

Where the user's own housing is used, it is the user's responsibility to ensure compliance with all EMC standards.

6. Mechanical Installation

6.1. Notes

The following notes must be observed and complied with by the user.

- The installation must be done with appropriate tools.
- The equipment may be installed only if de-energised.
- Sufficient cold air supply must be ensured in the control cabinet.
- The supplied air must be filtered so that no dirt particles could permeate the COP modules.

The following should be taken into account when cooling units are used:

- It should be made sure that the cold air flowing out of the cooling units is not blown directly onto the COP modules.
- No condensate should drip from the cooling units into the control cabinet.
- No condensate should drip from the cooling units onto electrical or electronic components.

6.2. Installation Regulations

Before their operation Indel control systems must be integrated into a control cabinet or terminal box. Their IP code under IEC 60529 should be at least IP54. The COP case must be installed on a metallically contacting baseplate. You should make sure that the contact points on the baseplate are to be bare.

If any other housing is used, no electromagnetic compliance and ESD damage are guaranteed (see also section 5.3.2).

6.2.1. Cooling and Distances

ATTENTION

During operation attention should be paid to sufficient cooling or ventilation of the whole COP node. The environmental conditions specified in section 7 should be ensured. COP nodes must be integrated so that all modules be in upright position so that the warmth can escape upwards.
The figure below shows an example of the minimum distances for COP modules to be installed. The modules must always be installed vertically so that the supplied cold air could flow through the node. If the modules are arranged horizontally, there is a risk of heat build-up, which could destroy the modules. The lateral distance from other modules and components is at least 50mm. Distances up and down should be at least 100mm. If necessary, additional cooling, for example with active fans, should be provided.

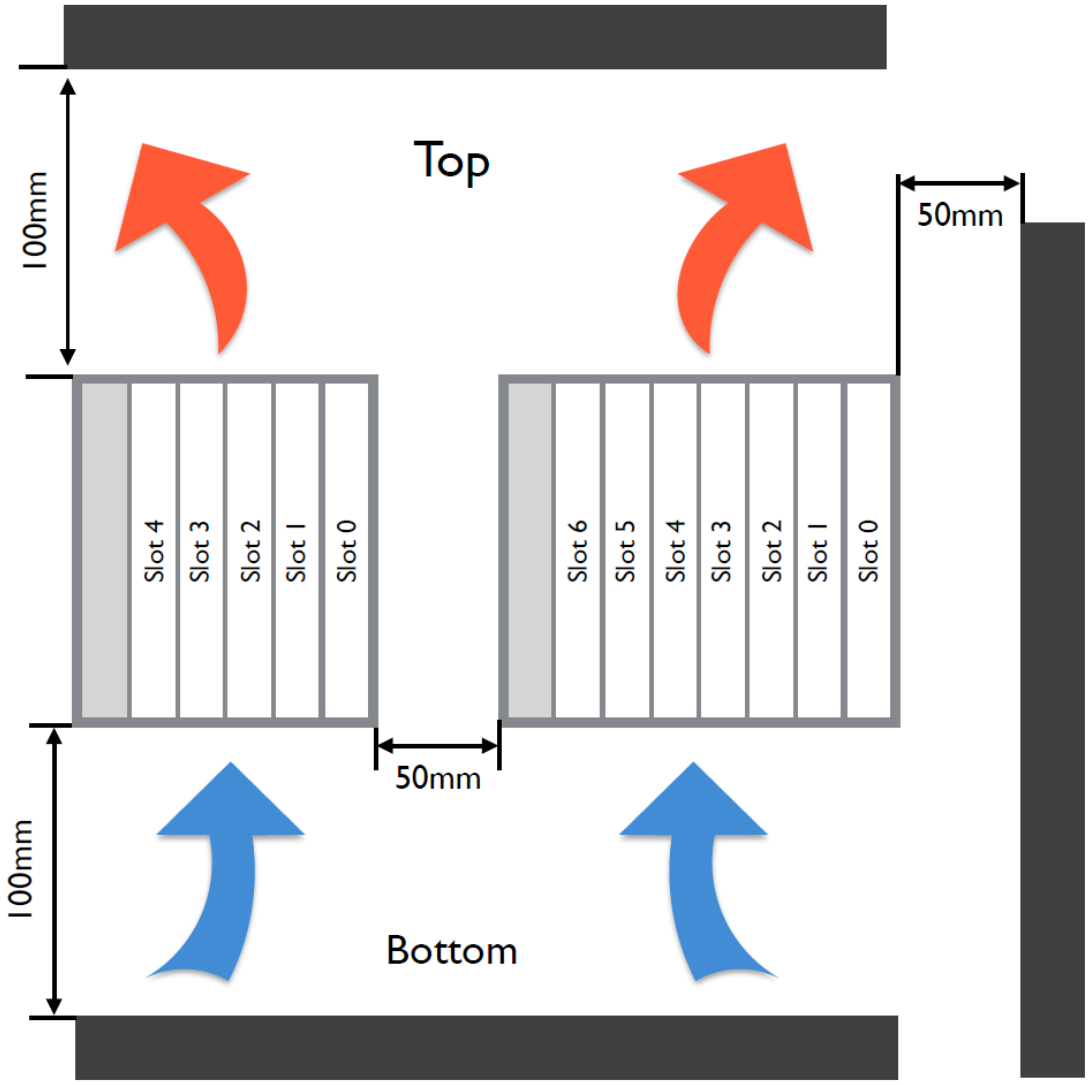

6.3. COP Case Dimensions

Indel offers two different housings for COP modules. Indel guarantees compliance with applicable EMC standards only if one of these housings is used.

6.3.1. Case with 1 Slot

This housing provides space for 1 COP module. It is only intended for uses with a single stand-alone Master COP. The housing must be fastened by means of 2x M4 screws.

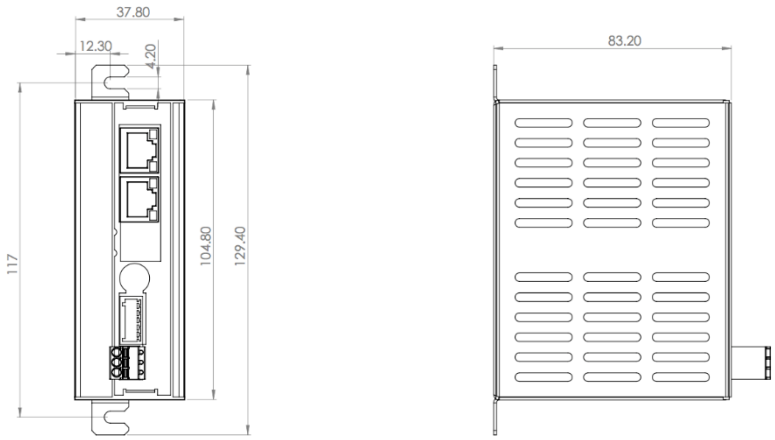

6.3.2. Case with up to 3 Slots

This housing provides space for a total of 3 COP modules. The housing must be fastened by means of 4x M4 screws.

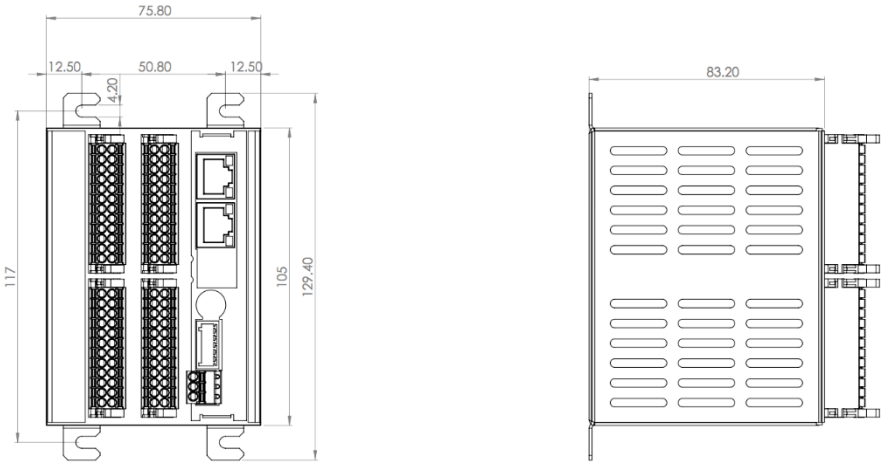

6.3.3. Case with up to 5 Slots

This housing provides space for a total of 5 COP modules. The housing must be fastened by means of 4x M4 screws.

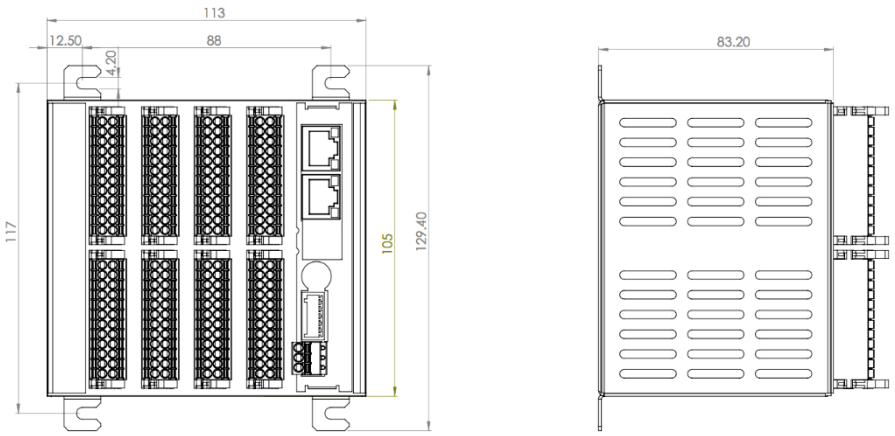

6.3.4. Case with up to 7 Slots

This housing provides space for a total of 7 COP modules. The housing must be fastened by means of 4x M4 screws.

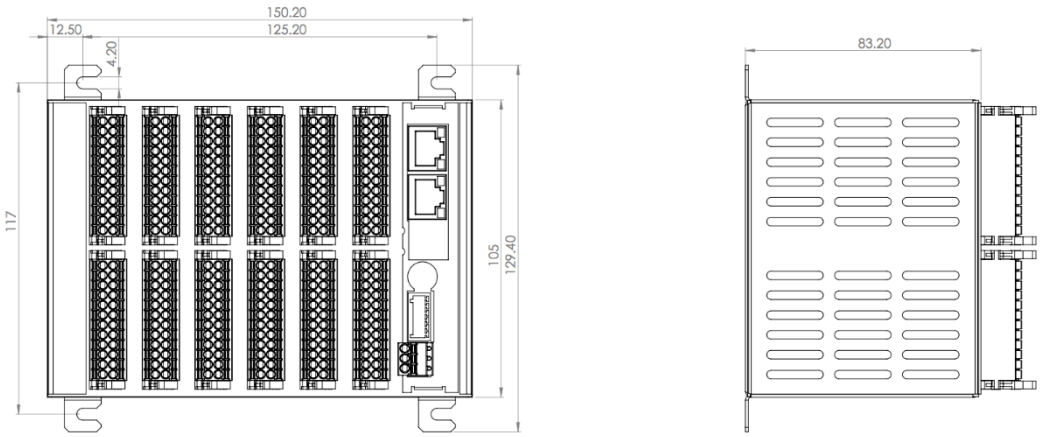

7. Environmental Conditions

ATTENTION

The following environmental conditions apply to all COP modules and must be observed by the user. Failure to do so makes all warranty claims against Indel null and void.

Environmental Condition		
IP code oft he COP modules	IP20	
Switch-on interval (Time between Power off and Power on)	> 10	s
Ambient temperature: storage	-20 ... 80	°C
Ambient temperature: operation	0 ... 40	°C
Maximum heat sink temperature	80	°C
Vibrations according to EN 60068-2-6 Amplitude, Frequency response	0.35 10 ... 120	mm Hz
Shock according to EN 60068-2-27	1	g
Warm-up time of analogue modules	15	min
Installation position of COP modules	vertical	
Relative humidity, no condensation	90	%
Interference immunity with mains filter in industrial conditions	EN 61000-6-2	
Emitted interference in industrial conditions	EN 61000-6-4	
Electrical safety (electrical clearances)	EN 50178, EN 61010	

8. COP-MAS2 (Master 2nd Generation)

COP-MAS2 6113475xx

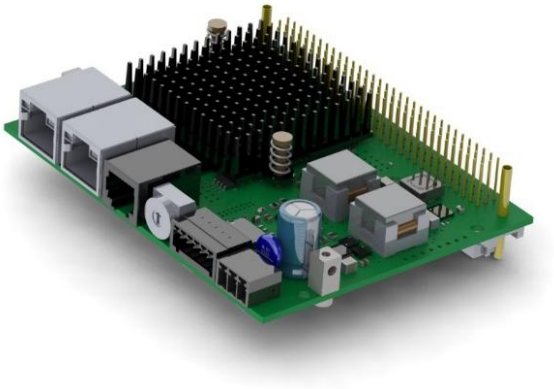

The COP-MAS2 is the successor of the COP-MAS. Depending on its option, the COP-MAS2 is equipped with a single or dual core ARM Cortex-A9 processor. The COP-MAS2 is a universal CPU board to be used as a compact control unit. It can be operated either on a stand-alone basis or as a GinLink Slave. The master can communicate with up to six COP modules of any type. As the CPU board of a compact control unit, the master COP provides customer-specific machine software based on Indel's INOS real-time operating system. It controls and coordinates all peripherals: analogue and digital inputs and outputs, axes, counters, customer-specific electronics, etc. If the master COP is used as a fieldbus slave, it serves as an active bus coupler with its own CPU. The decentralised computing power can be used for signal pre-processing and the execution of customer-specific algorithms.

8.1. Technical Specifications

8.1.1. Option 2x800M

The following technical specifications apply to the 2x800M option.

Processor		
Processor	ARM Cortex-A9	
Number of cores	2	
CPU clock	800	MHz
DDR RAM	256	MB
Flash PROM	8	MB
NVRAM	512	kB
Expandable memory	SD card adapter	
Floating point unit	Yes	
GinLink Master interfaces	• 1 x 1GBit Ethernet • 1 x GinLink • 1 x serial RS232 or RS422/RS485 interface • 1 x serial TTL or RS422/Rs485 interface	
GinLink Slave interfaces	• 2 x GinLink • 1 x serial RS232 or RS422/RS485 interface • 1 x serial TTL or RS422/Rs485 interface	
Maximum COP bus frequency	16	kHz

Logic Power Supply		
Rated voltage	24 -20% +30%	V_{DC}
Fuse	8A, fast acting	
Module		
Maximum power consumption at 24V node power supply	300	mA

8.1.2. Option 800M/LITE

The following technical specifications apply to the 800M/LITE option

Processor		
Processor	ARM Cortex-A9	
Number of cores	1	
CPU clock	800	MHz
DDR RAM	256	MB
Flash PROM	8	MB
Floating point unit	Yes	
GinLink Master interfaces	• 1 x 1GBit Ethernet • 1 x GinLink • 1 x serial RS232 or RS422/RS485 interface • 1 x serial TTL or RS422/Rs485 interface	
GinLink Slave interfaces	• 2 x GinLink • 1 x serial RS232 or RS422/RS485 interface • 1 x serial TTL or RS422/Rs485 interface	
Maximum COP bus frequency	16	kHz
Logic power supply		
Rated voltage	24 -20% +30%	V_{DC}
Fuse	8A, fast acting	
Module		
Maximum power consumption at 24V node power supply	300	mA

8.2. Pin Assignment

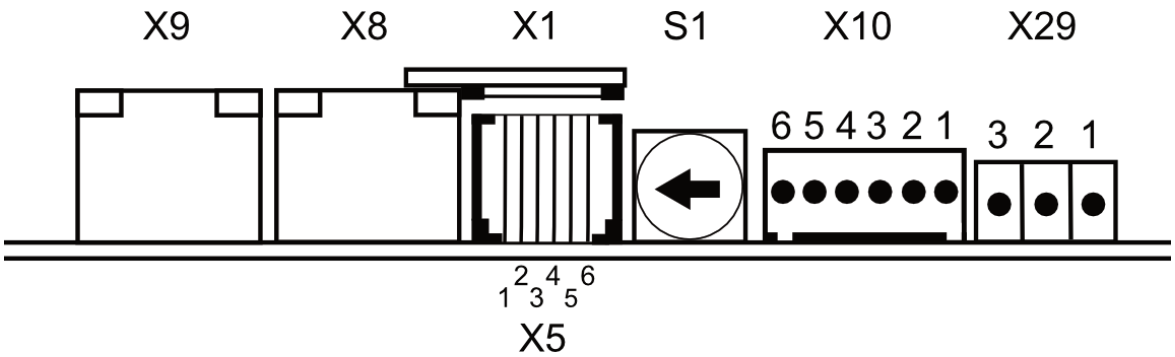

Identification	Description
X9	GinLink in
X8	GinLink out/LAN[1)]
X1	SD card slot

1) The functionality of X8 varies depending on the switch setting (S1). See section 8.3.

Identification	Pin No.	RS232 Description	RS422/485 Description
X5 RJ12	1	Tx	nTx
	2	Rx	nRx
	3	DTR	pTx
	4	DSR	pRx
	5	GND	
	6	Earth/shield	

RS422/485: The braking resistor can be connected externally.
RS485: The RX and TX lines must be externally connected to each other.

Identification	Description
S1	Options rotary switch

Identification	Pin No.	TTL Description	RS422/485 Description
X10	1	Rx	pTx
	2	Tx	nTx
	3	-	nRx
	4	-	pRx
	5	5V	
	6	GND	

The braking resistor between 3 and 4 is 120Ohm
RS485: The RX and TX lines must be externally connected to each other.

Identification	Pin No.	Description
X29 Power supply	1	24V
	2	GND
	3	Earth

8.3. Options Rotary Switch

You can use the options rotary switch to decide in which state the master is to be booted. The table below shows various states of the options rotary switch and available combinations.

Switch Position	Emergency system	GinLink Master 1)	LAN	Default IP	Description
0x0					Standard slave
0x1		x	x		Standard master or stand-alone
0x2		x	x	x	Master with default IP
0x3	x				Slave in the emergency system
0x4			x		Slave with debug LAN
0x5	x		x		Master/slave with debug LAN in the emergency system
0x6			x	x	Slave with debug LAN and default IP
0x7	x		x	x	Master/slave with debug LAN in the emergency system and default IP
0x8 ... 0xF	Reserve				

Emergency system
The master boots in the Indel emergency system.

GinLink Master
The COP-MAS2 also serves as a master GinLink. This allows for communication with other Indel modules via GinLink. This is the case when the COP-MAS2 is used as an applications master.

LAN
The GinLink out jack becomes a 1 GBit LAN interface. This allows for INCO communication with a host computer.

Default IP
By default, the master's IP (LAN interface) is 192.168.1.251.

8.4. Connection Examples

RS232

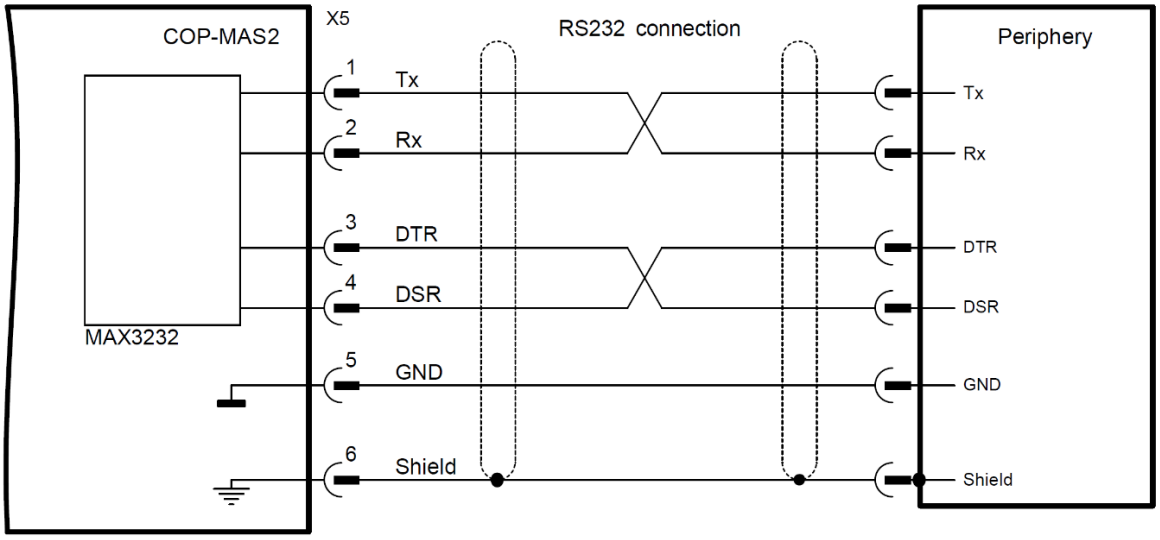

8.5. Available Options

The COP-MAS2 is available in two different options. They can both be operated on a stand-alone basis or as a master GinLink. The option2x800M has a dual core ARM Cortex-A9 and is provided with a NVRAM and a SD card slot.
The option 800M/LITE is a COP-MAS2 with a single core ARM Cortex-A9 processor, without NV-RAM and a SD card slot.

Item Number	Label	Option	Description
611347505	COP-MAS2	2x800M	Dual core ARM Cortex-A9 800MHz, 8MB of flash memory, 256MB of RAM, 0.5MB of NVRAM, FPU, COP Master, 5VPS, 3.3VPS, GinLink Master/ GinLink Slave, SD card adapter, RS232, RS422/RS485 or TTL
611347500	COP-MAS2	800M/LITE	Single core ARM Cortex-A9 800MHz, 8MB of flash memory, 256MB of RAM, FPU, COP Master, 5VPS, 3.3VPS, GinLink Master, Gin-Link Slave, RS232, RS422/RS485 or TTL

8.6. Accessories

Item Number	Label	Option	Description
610839800	RJ-12 SIO adapter		Cable adapter for SIO between RJ-12 and D-Sub male, 20cm long

9. COP-MAS (Master)

COP-MAS 610940800

The COP-MAS is a universal CPU board to be used as a compact control unit. It can be operated either on a stand-alone basis or as a GinLink Slave. The master can communicate with up to six COP modules of any type. As the CPU board of a compact control unit, the master COP provides customer-specific machine software based on Indel's INOS real-time operating system. It controls and coordinates all peripherals: analogue and digital inputs and outputs, axles, counters, customer-specific electronics, etc. If the master COP is used as a fieldbus slave, it serves as an active bus coupler with its own CPU. The decentralised computing power can be used for signal pre-processing and the execution of customer-specific algorithms.

9.1. Technical Specifications

Processor		
Processor	PowerPC 405	
CPU clock	330	MHz
DDR RAM	32	MB
Flash PROM	4	MB
NVRAM	512	kB
Compact control unit interfaces	One 1GBit Ethernet, one GinLink One serial RS232 interface	
GinLink Slave interfaces	Two GinLinks One serial RS232 interface	
Maximum COP bus frequency	16	kHz
Logic power supply		
Rated voltage	24 $_{-20\% +30\%}$	V_{DC}
Fuse	8A, fast acting	
Module		
Maximum power consumption at 24V node power supply	310	mA

9.2. Pin Assignment

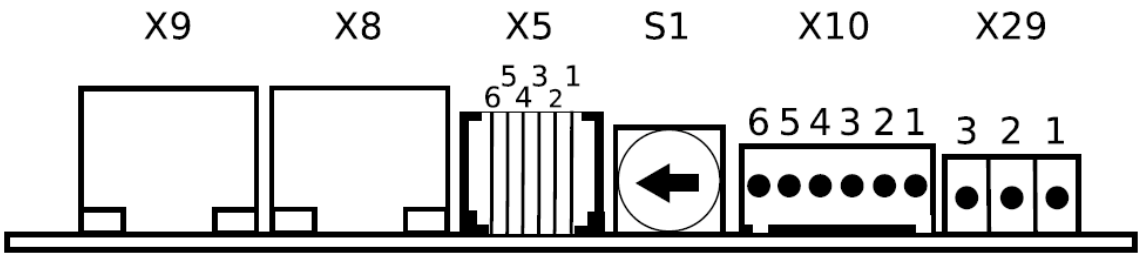

Identification	Description
X9	GinLink in
X8	GinLink out/LAN [1)]

1) The functionality of X8 varies depending on the switch setting (S1). See section 9.3.

Identification	Pin No.	Description
X5 RS232	1	Tx
	2	Rx
	3	DTR
	4	DSR
	5	GND
	6	n.c.

Identification	Description
S1	Address adder

Identification	Pin No.	Description
X10	1	Tx
	2	Rx
	3	-
	4	-
	5	5V
	6	GND

Identification	Pin No.	Description
X29 Power supply	1	24V
	2	GND
	3	Earth

9.3. Options Rotary Switch

You can use the options rotary switch to decide in which state the master is to be booted. The table below shows various states of the options rotary switch.

Switch Position	LAN	Description
0x0		Standard slave
0x4	x	Standard stand-alone

LAN
The GinLink out jack becomes a 1 GBit LAN interface. This allows for INCO communication with a host computer.

9.4. Connection Examples

RS232

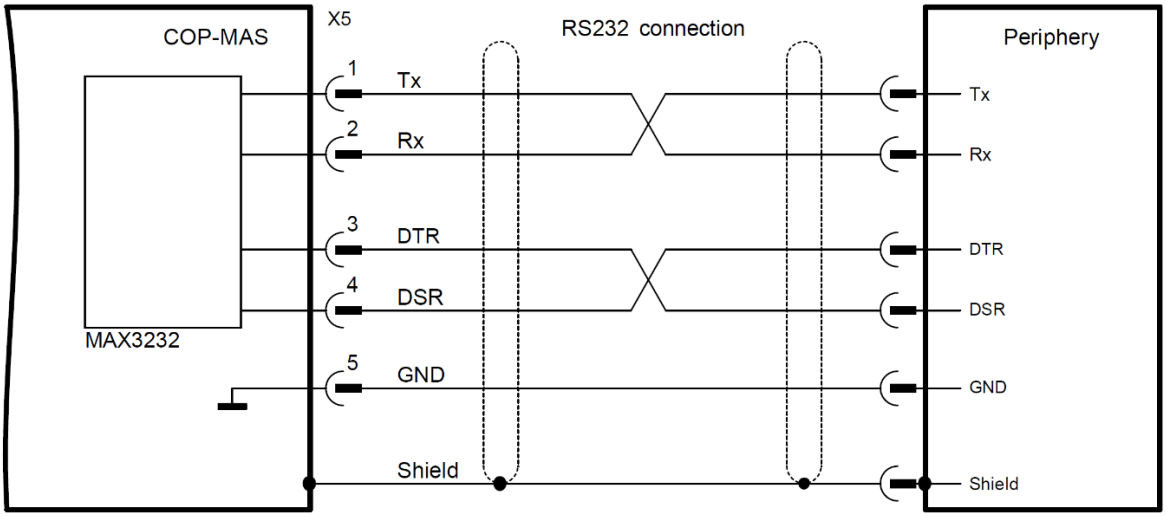

9.5. Available Options

The COP-MAS is available in two different options. They can both be operated on a stand-alone basis. If another COP node needs to be used for a stand-alone application, a COP-MAS with the GinLink Master option can be deployed. It can communicate with other Indel peripherals via GinLink.

Item Number	Label	Option	Description
610940800 *no longer available, but possibly still repairable*	COP-MAS	GinSlave	PPC 330MHz, 4MB of flash memory, 32MB of RAM. 0.5MB of NVRAM, COP Master, 5VPS, 3.3VPS, GinLink Slave
610940810 *no longer available, but possibly still repairable*	COP-MAS	GinMaster	PPC 330MHz, 4MB of flash memory, 32MB of RAM. 0.5MB of NVRAM, COP Master, 5VPS, 3.3VPS, GinLink Master

9.6. Accessories

Item Number	Label	Option	Description
610839800	RJ-12 SIO adapter		Cable adapter for SIO between RJ-12 and D-Sub male, 20cm long

10. COP-PAS LEX (Passive Bus Coupler)

COP-PAS 611143600

The COP-PAS is used as a GinLink bus coupler. Any type of COP node can thus be integrated into and operated in a GinLink system. Addressing is done via MAC address.

COP-PAS LEX 611143630

New hardware revision (from A) with an extra connector for GinLink extension.
It replaces the old version 0.
Link expander:

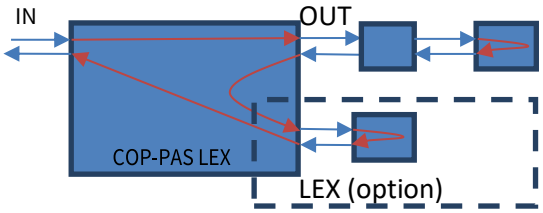

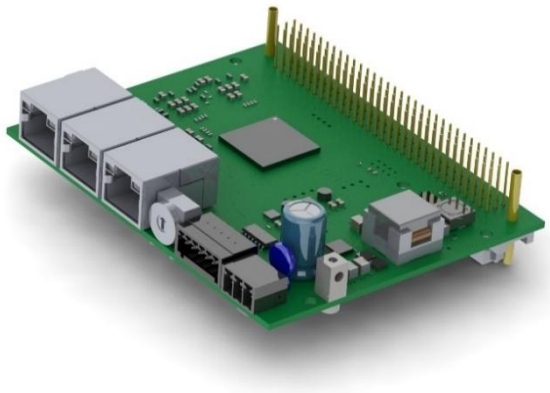

10.1. Technical Specifications

Bus Coupler		
Interfaces	GinLink to COP bus	
	GinLink expander	
Maximum COP bus frequency	16	kHz
Logic Power Supply		
Rated voltage	24 $_{-20\% +30\%}$	V_{DC}
Fuse	8A, fast acting	
Module		
Maximum power consumption @24V card power supply	200	mA

10.2. Pin Assignment

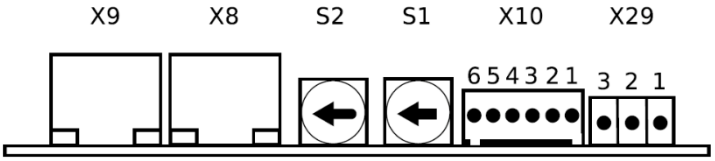

COP-PAS HW Rev0

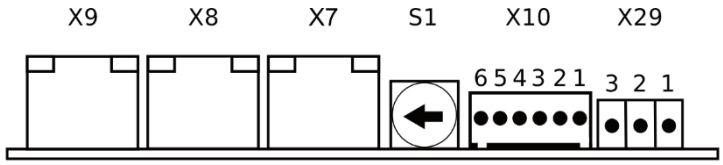

COP-PAS LEX HW RevA

Identification	Description	Description
X9	GinLink in	GinLink in
X8	GinLink out	GinLink out
X7	-	GinLink LEX
S2	Address adder	-
S1	Address adder	Address adder

Identification	Pin No.	Description
X10	1	Tx
	2	Rx
	3	-
	4	-
	5	5V
	6	GND

Identification	Pin No.	Description
X29 Power supply	1	24V
	2	GND
	3	Earth

10.3. Options Rotary Switch

The rotary switch S1 at COP-PAS LEX is used as options rotary switch

Switch Position	LEX	Description
0x0; 0x2 bis 0xF		COP-PAS
0x1	x	COP-PAS with GinLink extension (LEX)

10.4. Available Options

Item Number	Label	Option	Description
611143600 *no longer available, but possibly still repairable*	COP-PAS		Passive GinLink Slave bus coupler for COP modules, 5VPS, 3.3VPS
611143630	COP-PAS	LEX	Passive GinLink Slave bus coupler for COP modules, 5VPS, 3.3VPS, extra Ethernet connector for GinLink extension

11. COP-AX (Motor Output Stage)

COP-AX 611145800

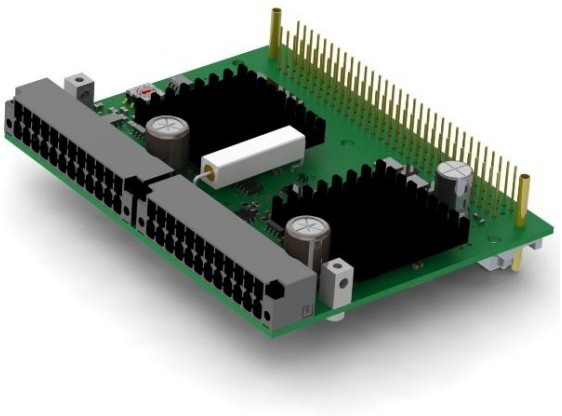

The COP-AX module has two motor output stages. All popular motor types are supported. Incremental or SinCos encoders can be connected as feedback systems. In addition, an integrated braking resistor (ballast resistor) is available.

For the motor control, a COP-MAS or COP-MAS2 module with a free processor core is needed in the same COP case. Only a maximum of four COP-AX/AX2 modules can be used per COP node.

If a COP node contains COP-AX/AX2 modules, they must start with the rotary switch address 0. Further COP-AX/AX2 modules follow with increasing addressing. This means when using one module the address is set to 0. When using three modules, the addresses are set to 0, 1and 2. All other COP module types receive the subsequent rotary switch addresses.

If the motor has Hall sensors, a COP-IO module is required in the same COP node. Hall sensors must be connected to the ascending numbered digital inputs. For example, Hall 1 at DIN 1, Hall 2 at DIN 2 and Hall 3 at DIN 3.

ACHTUNG

The external enable pin (Ext_En) cannot be interpreted as Safe Torque Off (STO). To achieve no-voltage on the axis, the motor supply voltage (Mot_Ucc) has to be turned off completely.

11.1. Technical Specifications

Motor Output Stage		
Number of output stages	2	
Integrated braking resistor	56Ω/5W	
Minimum intermediate circuit voltage	24	V_{DC}
Rated intermediate circuit voltage	48	V_{DC}
Maximum intermediate circuit voltage	60	V_{DC}
Continuous current per final stage[1)]	2.5	A_{RMS}
Peak current (max 5s) per final stage[1)]	5	A_{RMS}
Motor		
Minimum inductance	1	mH
Minimum resistance	0.2	Ω
Maximum cable length	20	m
Motor cable	Shielded	
Motor types	Synchronous servo motors, DC motors, stepper motors, Linear motors	

Incremental Encoder Interface		
Level	RS422	
Input impedance	120	Ω
Maximum input frequency	2.5	MHz
Maximum current load at 5V output	200	mA
Power cable	Shielded	
SinCos Interface		
Level	1	V_{RMS}
Input impedance	120	Ω
Maximum input frequency	200	kHz
Maximum current load at 5V output	200	mA
Analogue input resolution	16	Bit
Analogue input use	12	Bit
Power cable	Double shielded, pair-twisted	
Module		
Maximum power consumption at 24V node power supply	-	mA

1) Additional ventilation may be needed to dissipate the waste heat generated.

11.2. Pin Assignment

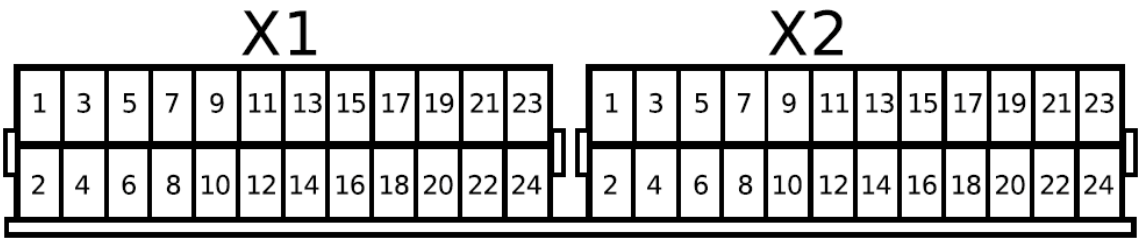

X1					
No.	Dir	Id.	Id.	Dir	No.
2	In	Inc0 A+ Clk+	Sin+ 0	In	1
4	In	Inc0 A- Clk-	Sin- 0	In	3
6	In	Inc0 B+ Data+	Cos+ 0	In	5
8	In	Inc0 B- Data-	Cos- 0	In	7
10	In	Ref+	GEN+ 0	Out	9
12	In	Ref-	GEN- 0/ Enc_12V	Out	11
14	Out	Enc_5V	Shield		13
16		GND	Shield		15
18	In	MTmp 0	Mot 0 U	Out	17
20	In	Ext_En	Mot 0 V	Out	19
22		GND	Mot 0 W	Out	21
24	In	Mot_Ucc	Mot 0 X	Out	23

X2					
No.	Dir	Id.	Id.	Dir	No.
2	In	Inc1 A+ Clk+	Sin+ 1	In	1
4	In	Inc1 A- Clk-	Sin- 1	In	3
6	In	Inc1 B+ Data+	Cos+ 1	In	5
8	In	Inc1 B- Data-	Cos+ 1	In	7
10	In	Ref+	GEN+ 1	Out	9
12	In	Ref-	GEN- 1/ Enc_12V	Out	11
14	Out	Enc_5V	Shield		13
16		GND	Shield		15
18		MTmp 1	Mot 1 U	Out	17
20	In	Ext_En	Mot 1 V	Out	19
22		GND	Mot 1 W	Out	21
24	In	Mot_Ucc	Mot 1 X	Out	23

11.3. Connection Examples

Synchronous motor at a final stage

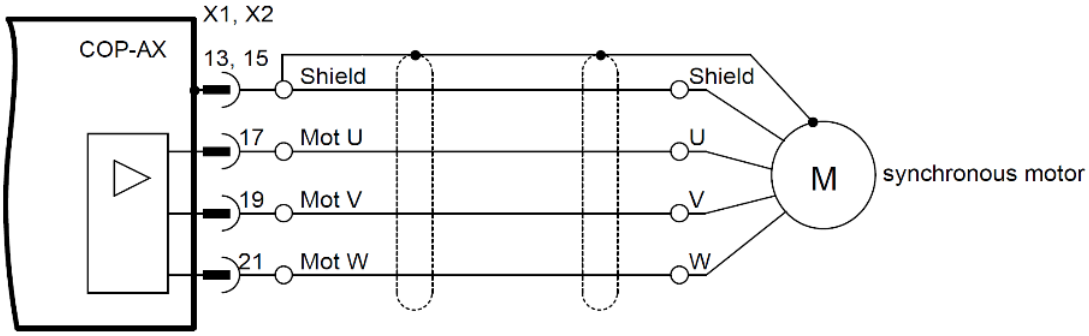

DC motor at a final stage

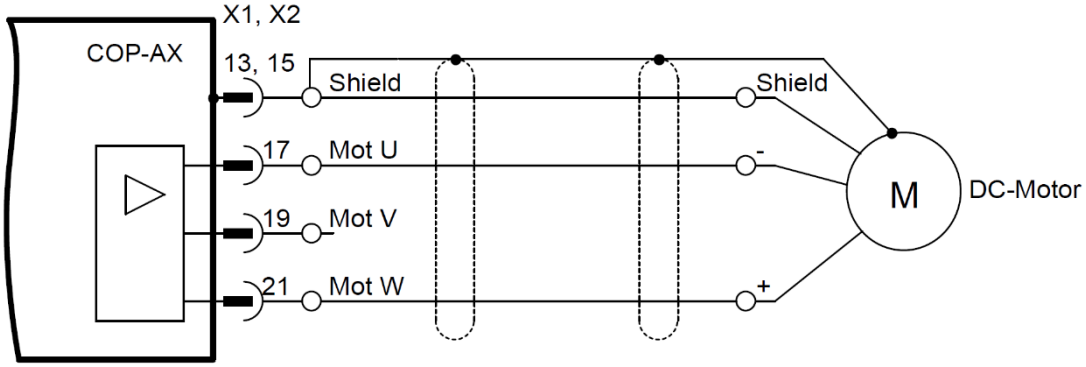

Synchronous motor at two parallel output stages

ATTENTION

The Y cables must be at least 25cm long, otherwise the output stages may be destroyed.

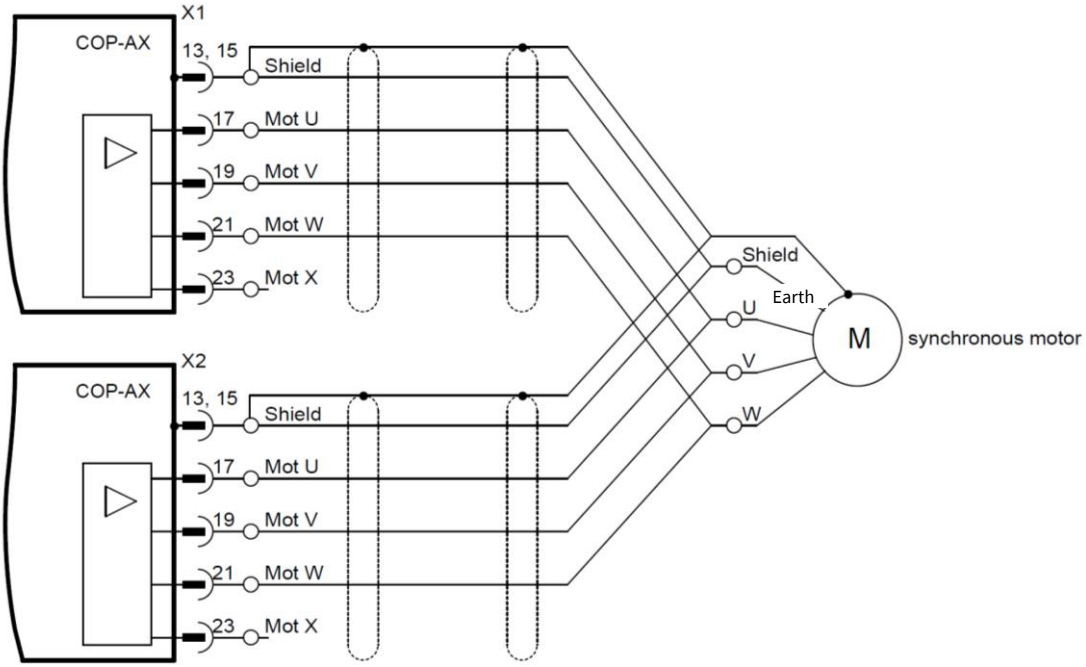

Stepper motor

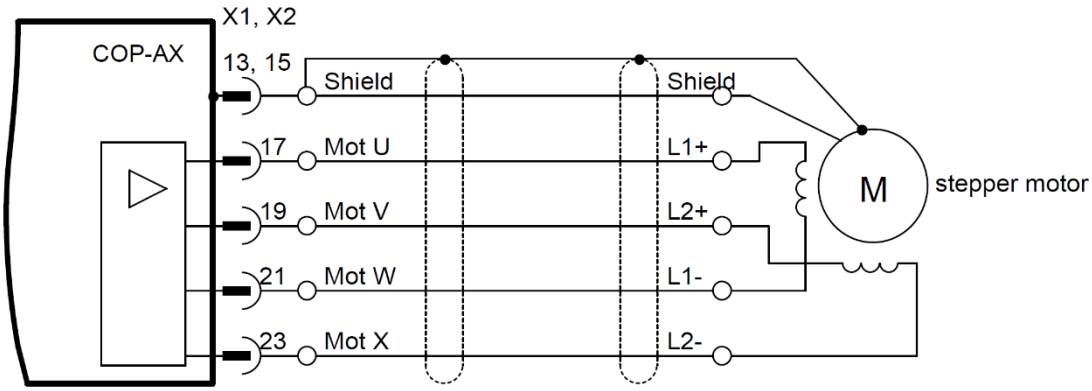

Stepper motor at two parallel output stages

ATTENTION

The Y cables must be at least 25cm long, otherwise the output stages may be destroyed.

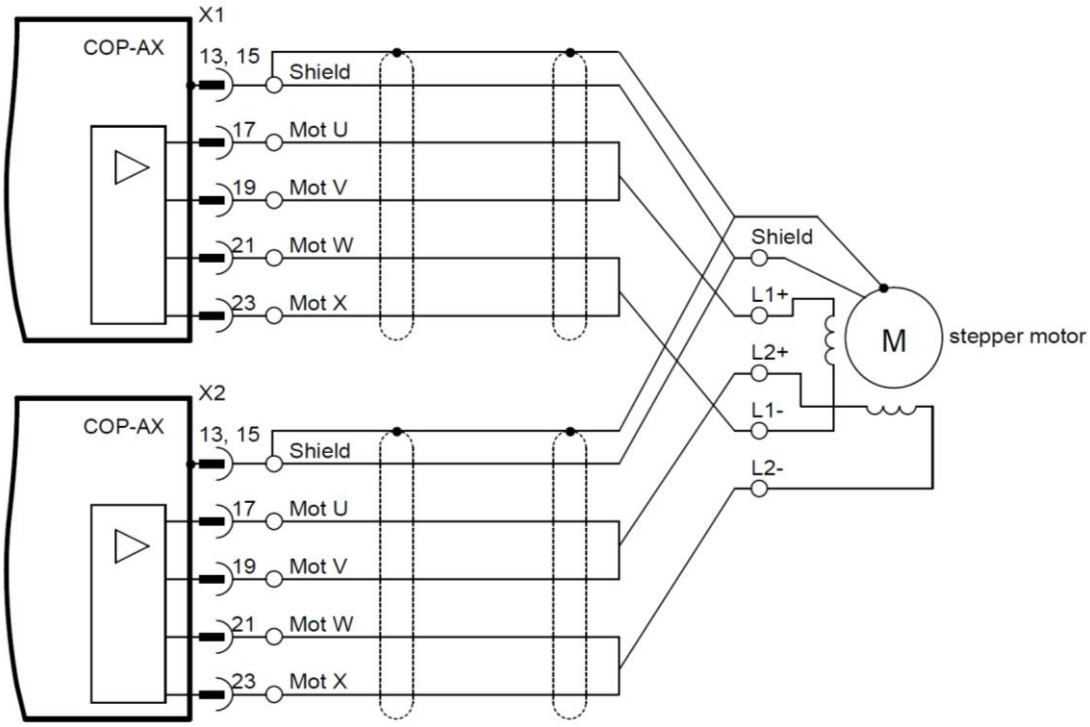

Incremental encoder feedback

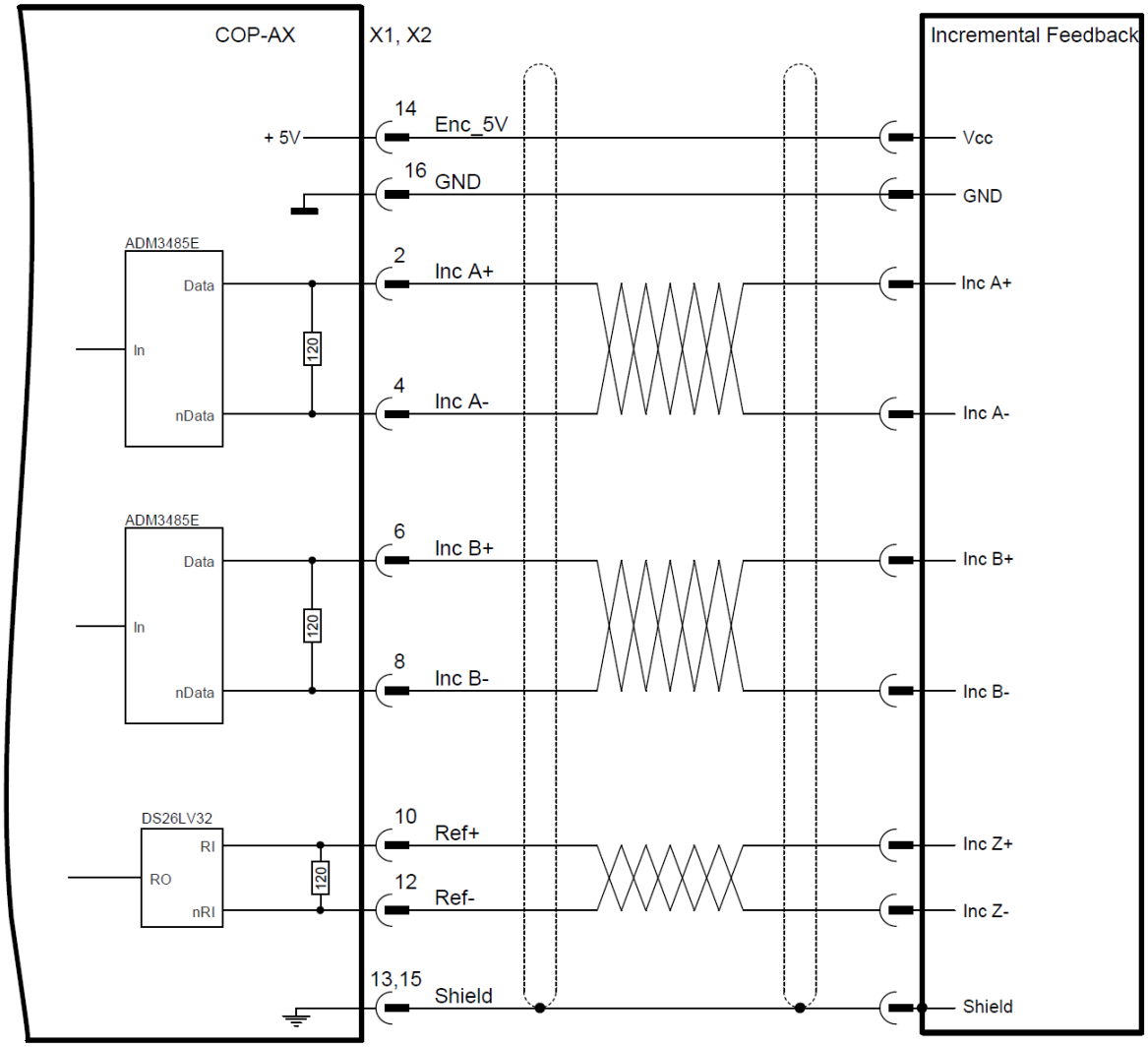

SinCos feedback

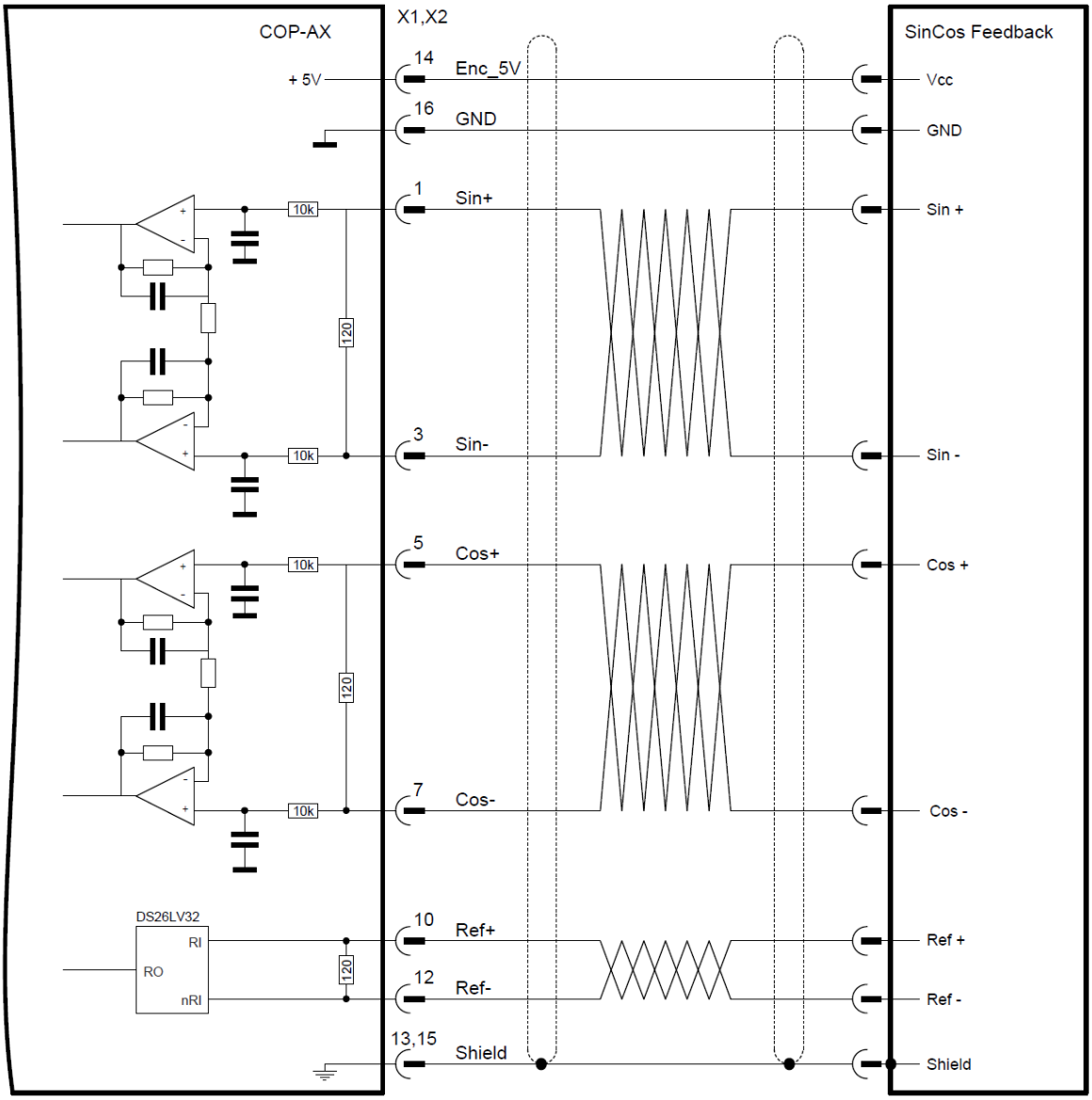

Hiperface Feedback

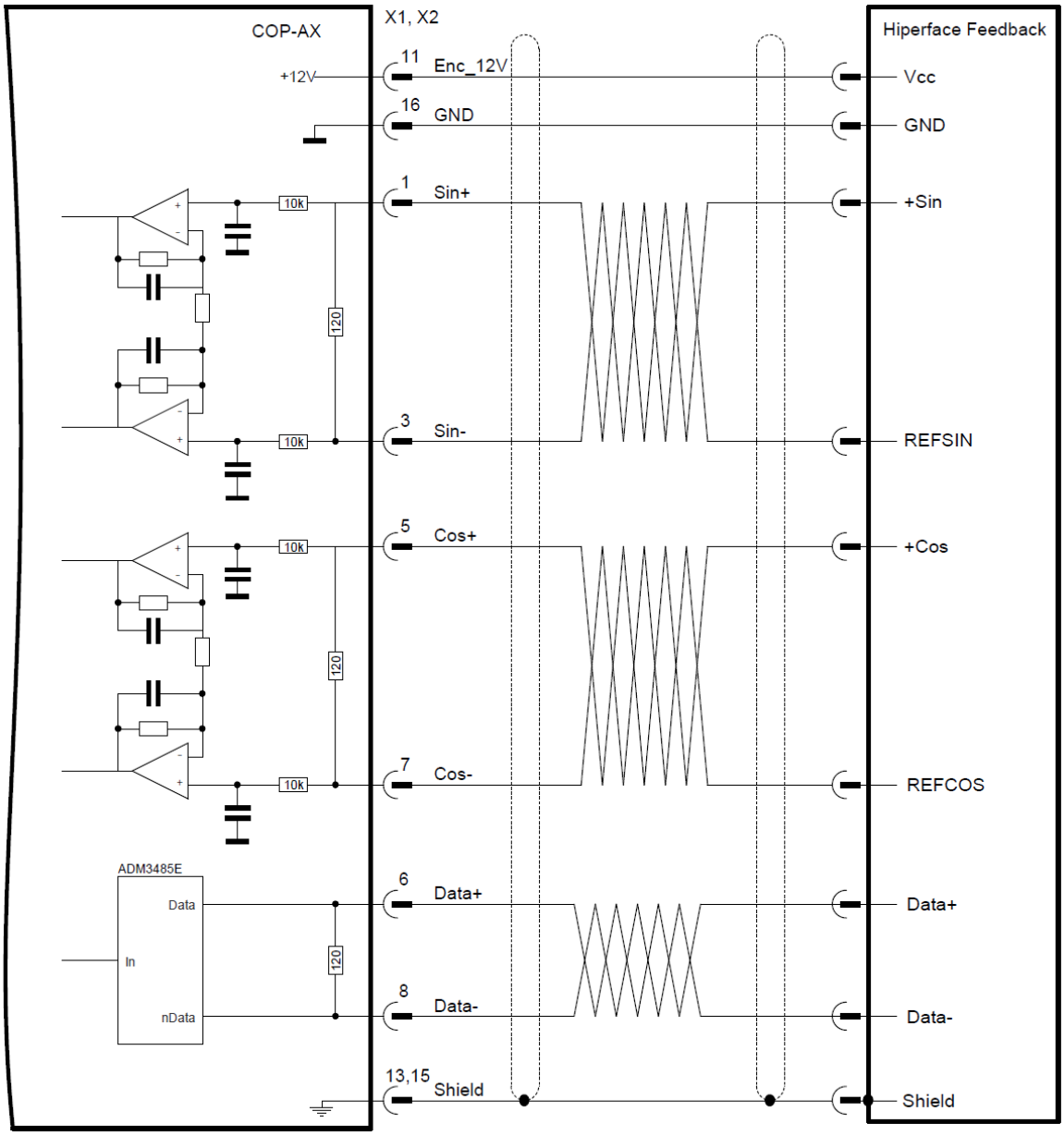

EnDat2.1 / SSI Feedback

If the supply voltage of the feedback system is >12V use Enc_12V (Pin 11) instead of Enc_5V.

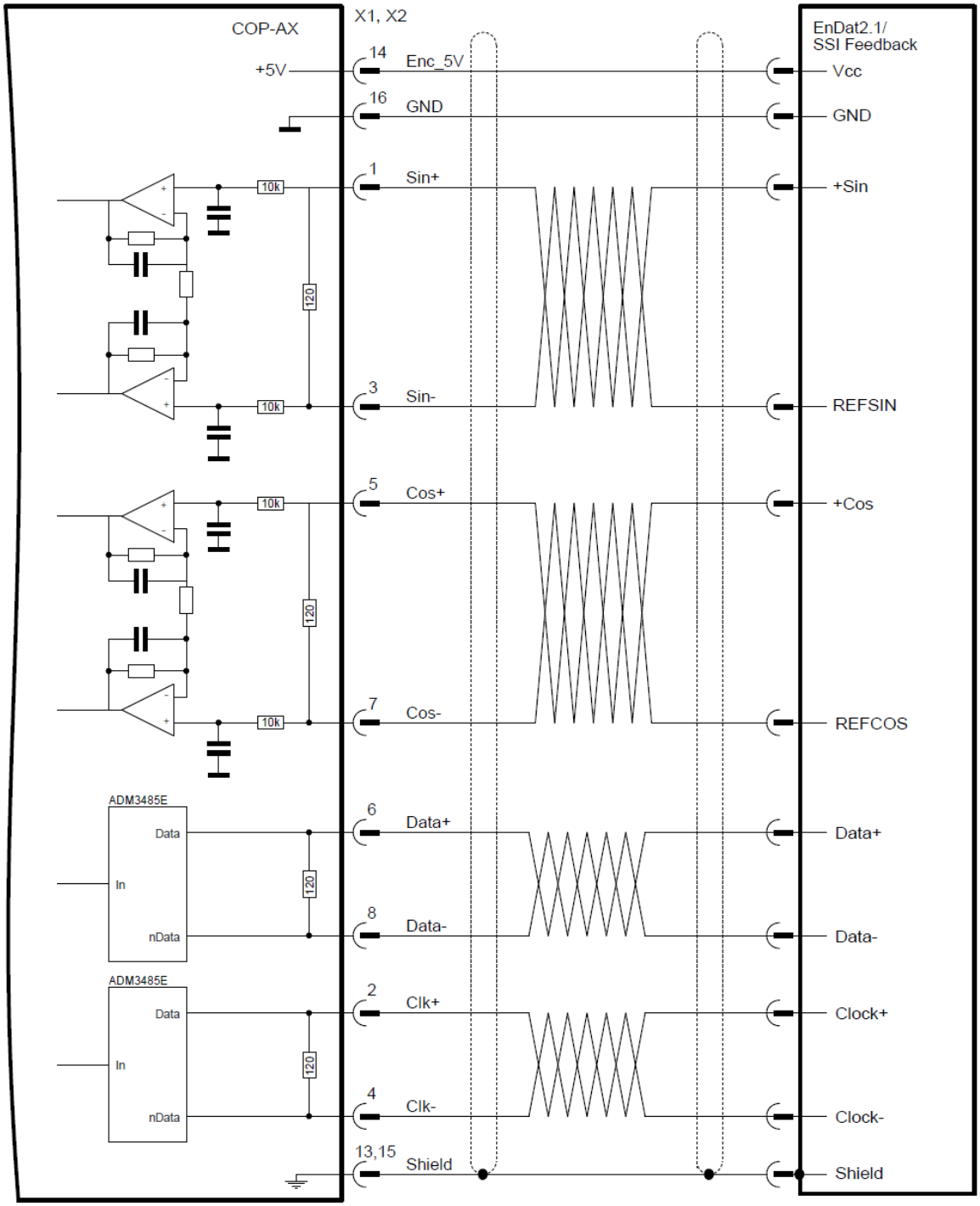

EnDat2.2 / BiSS-C Feedback

If the supply voltage of the feedback system is >12V use Enc_12V (Pin 11) instead of Enc_5V.

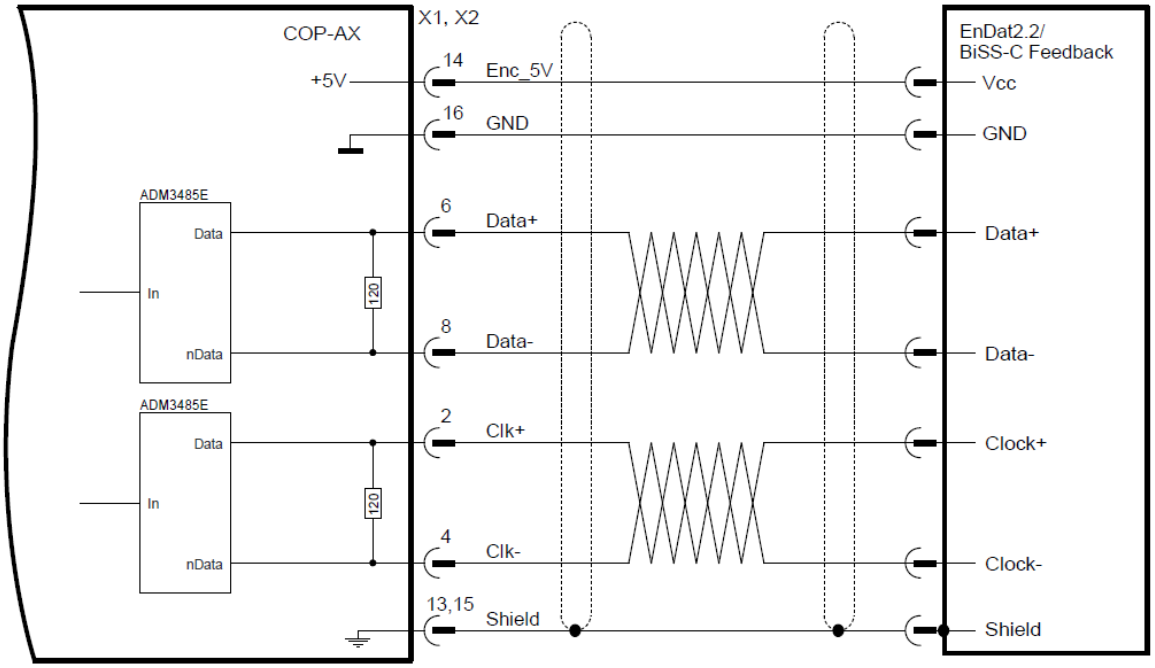

The purely digital control on the fast absolute encoders is currently not available for the COP modules!

11.4. Available Options

Item Number	Label	Option	Description
611145800	COP-AX		• 2 x motor output stage, • PM, SM, DC motors • SinCos feedback or • Incremental encoder feedback • Hiperface • EnDat 2.1 • SSI

12. COP-AX2 72V (Motor Output Stage)

COP-AX2 611552900

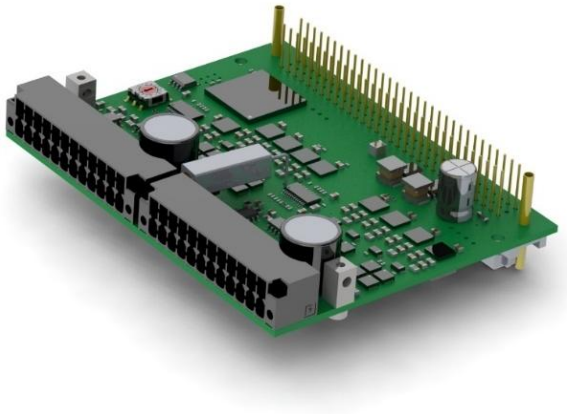

The COP-AX2 module has two motor output stages. All popular motor types are supported. Incremental or SinCos encoders can be connected as feedback systems. In addition, there is an integrated braking resistor (ballast resistor) and a connection for an external braking resistor.

For the motor control, a COP-MAS or COP-MAS2 module with a free processor core is needed in the same COP case. Only a maximum of four COP-AX/AX2 modules can be used per COP node.

If a COP node contains COP-AX/AX2 modules, they must start with the rotary switch address 0. Further COP-AX/AX2 modules follow with increasing addressing. This means when using one module the address is set to 0. When using three modules, the addresses are set to 0, 1and 2. All other COP module types receive the subsequent rotary switch addresses.

If an external motor brake is additionally connected or if the motor has Hall sensors, a COP-IO module is required in the same COP node. Hall sensors must be connected to the ascending numbered digital inputs. For example, Hall 1 at DIN 1, Hall 2 at DIN 2 and Hall 3 at DIN 3.

ACHTUNG

The external enable pin (Ext_En) cannot be interpreted as Safe Torque Off (STO). To achieve no-voltage on the axis, the motor supply voltage (Mot_Ucc) has to be turned off completely.

12.1. Technical Specifications

Motor Output Stage		
Number of output stages	2	
Integrated braking resistor	82Ω/4W	
Terminal to connect an external braking resistor	Present	
Minimum intermediate circuit voltage	24	V_{DC}
Rated intermediate circuit voltage	72	V_{DC}
Maximum intermediate circuit voltage	85	V_{DC}
Continuous current per final stage 1)	5	A_{RMS}
Peak current (Max 5s) per final stage1)	10	A_{RMS}

Motor		
Minimum inductance	1	mH
Minimum resistance	0.2	Ω
Maximum cable length	20	m
Motor cable	Shielded	
Motor types	Synchronous servo motors, DC motors, stepper motors, Linear motors	
Incremental Encoder Interface		
Level	RS422	
Input impedance	120	Ω
Maximum input frequency	2.5	MHz
Maximum current load at 5V output	200	mA
Power cable	Shielded	
SinCos Interface		
Level	1	V_{RMS}
Input impedance	120	Ω
Maximum input frequency	200	kHz
Maximum current load at 5V output	200	mA
Analogue input resolution	16	Bit
Analogue input use	12	Bit
Power cable	Double shielded, pair-twisted	
Module		
Maximum power consumption at 24V node power supply	-	mA

1) Additional ventilation may be needed to dissipate the waste heat generated.

12.2. Pin Assignment

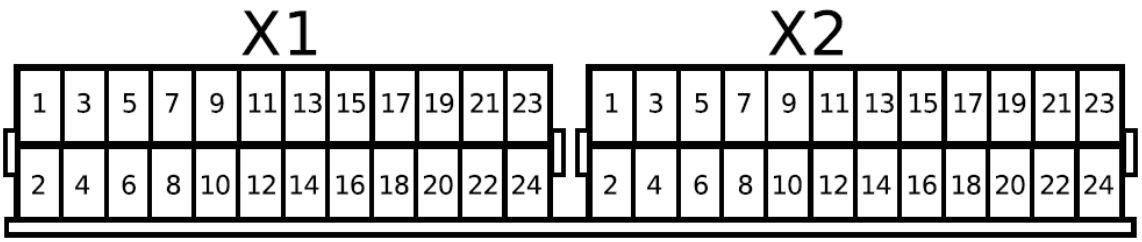

X1					
No.	Dir	Id.	Id.	Dir	No.
2	In	Inc0 A+ Clk+	Sin+ 0	In	1
4	In	Inc0 A- Clk-	Sin- 0	In	3
6	In	Inc0 B+ Data+	Cos+ 0	In	5
8	In	Inc0 B- Data-	Cos- 0	In	7
10	In	Ref+	-		9
12	In	Ref-	Enc_12V	Out	11
14	Out	Enc_5V	Earth		13
16		GND	Earth		15
18	In	MTmp 0	Mot 0 U	Out	17
20	In	MEn0	Mot 0 V	Out	19
22		Mot_GND	Mot 0 W	Out	21
24	In	Mot_Ucc	Mot 0 X	Out	23

X2					
No.	Dir	Id.	Id.	Dir	No.
2	In	Inc1 A+ Clk+	Sin+ 1	In	1
4	In	Inc1 A- Clk-	Sin- 1	In	3
6	In	Inc1 B+ Data+	Cos+ 1	In	5
8	In	Inc1 B- Data-	Cos- 1	In	7
10	In	Ref+	-		9
12	In	Ref-	Enc_12V	Out	11
14	Out	Enc_5V	Earth		13
16		GND	Earth		15
18	In	MTmp 1	Mot 1 U	Out	17
20		Ballast	Mot 1 V	Out	19
22		Mot_GND	Mot 1 W	Out	21
24	In	Mot_Ucc	Mot 1 X	Out	23

12.3. Connection Examples

Synchronous motor at a final stage

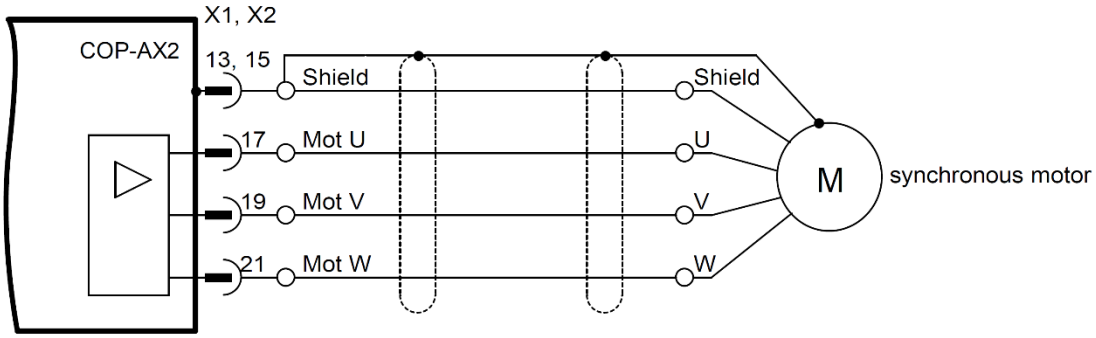

DC motor at a final stage

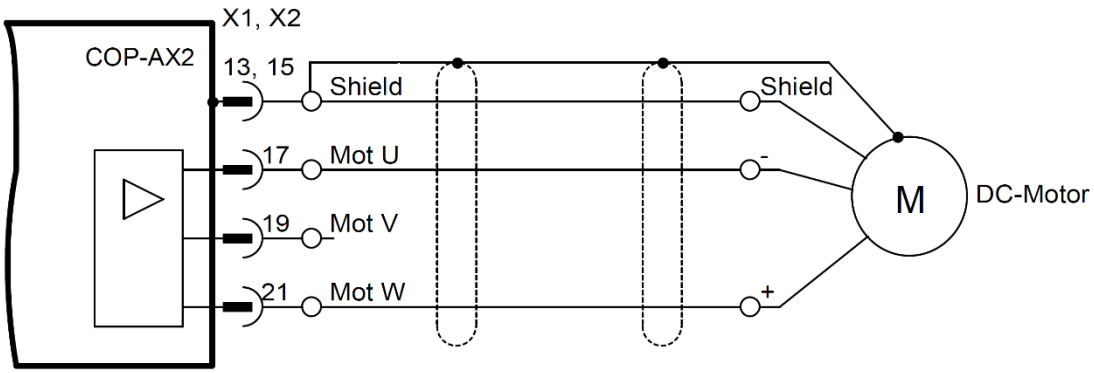

Synchronous motor at two parallel output stages

The Y cables must be at least 25cm long, otherwise the output stages may be destroyed.

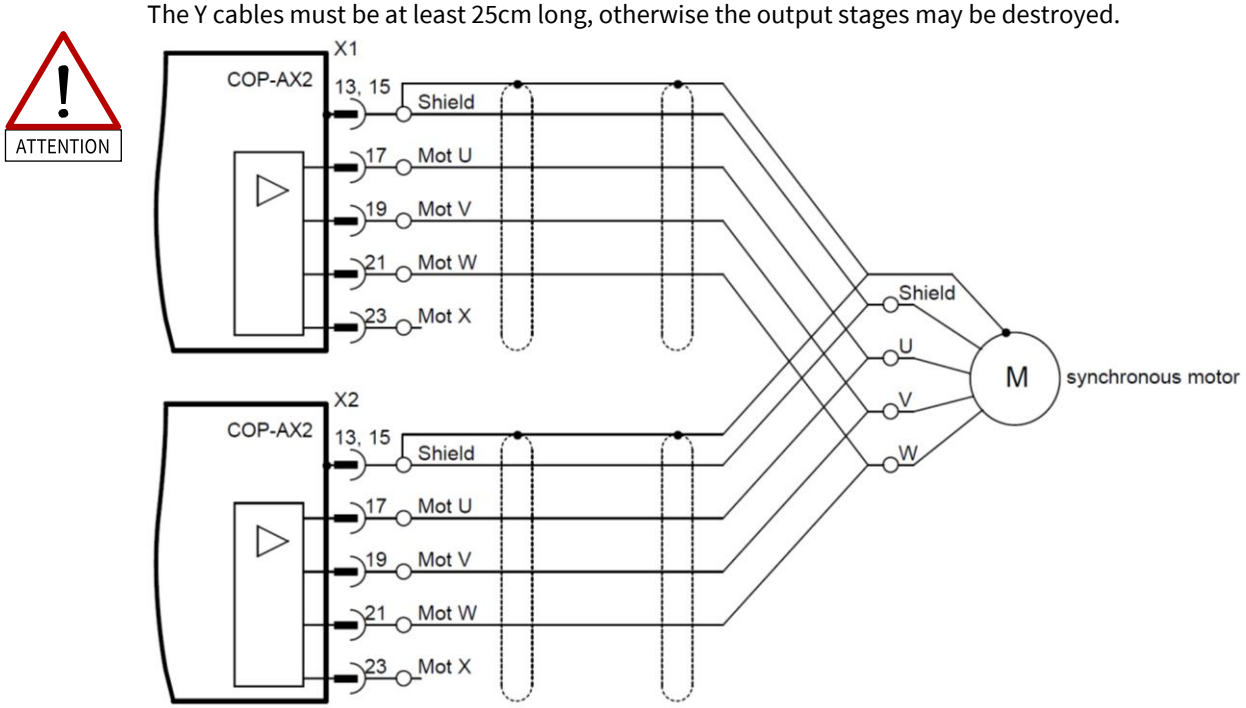

Stepper motor

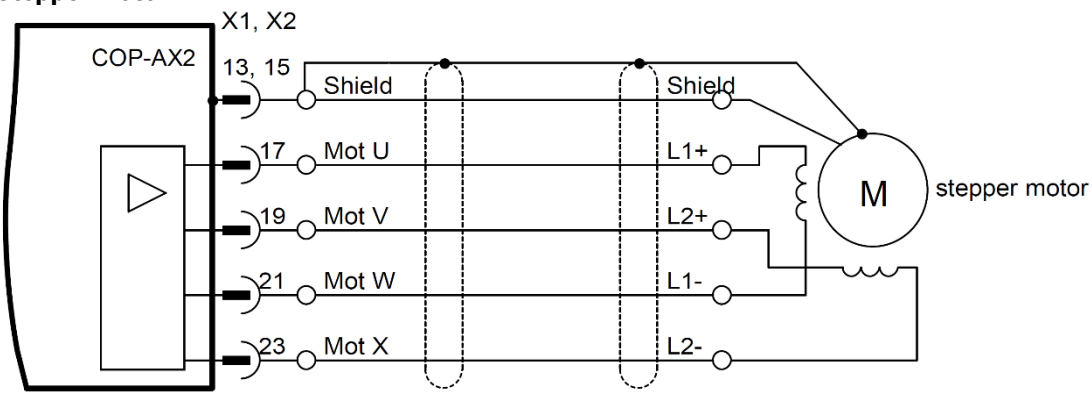

Stepper motor at two parallel output stages

ATTENTION

The Y cables must be at least 25cm long, otherwise the output stages may be destroyed.

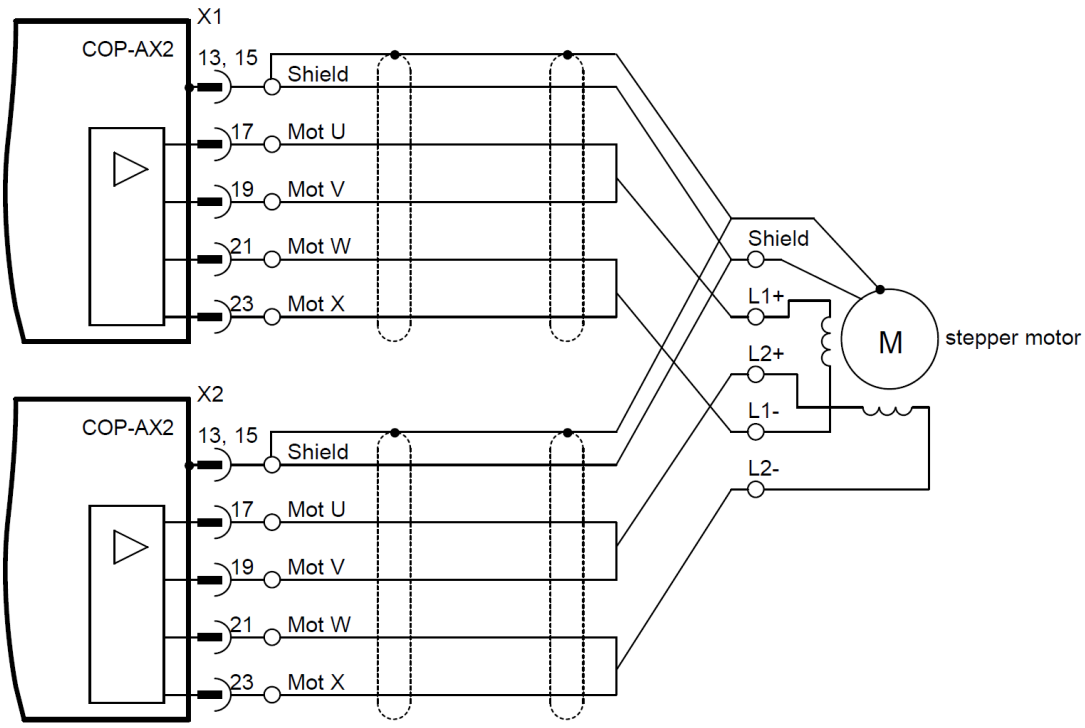

External braking resistor

The minimum resistance is 15Ohm. Connect the external resistor only to connector X2.

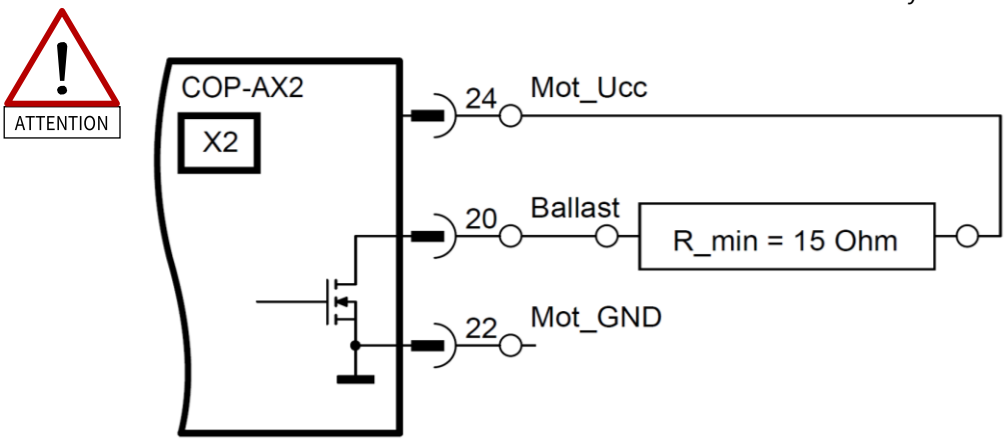

Incremental encoder feedback

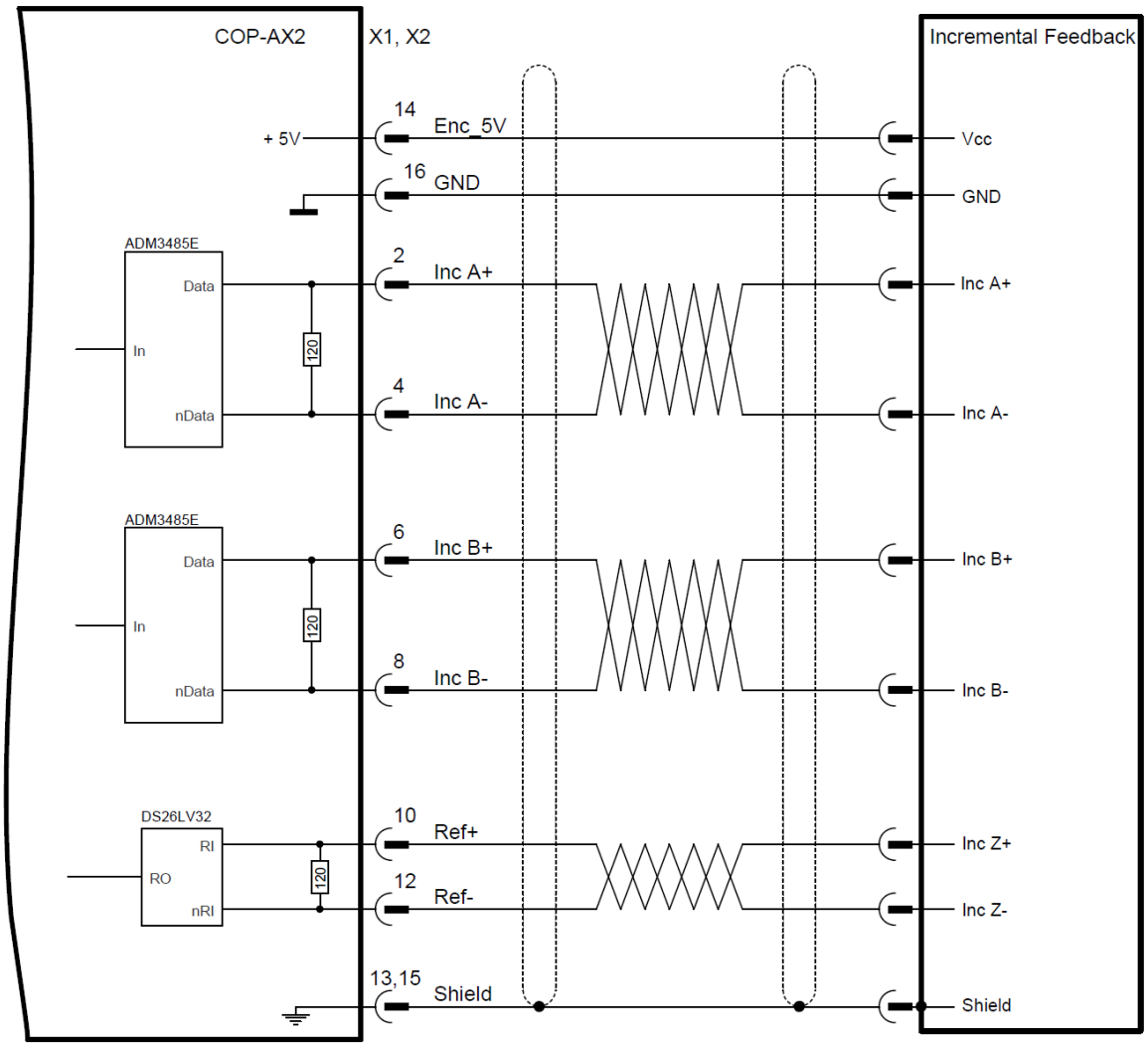

SinCos feedback

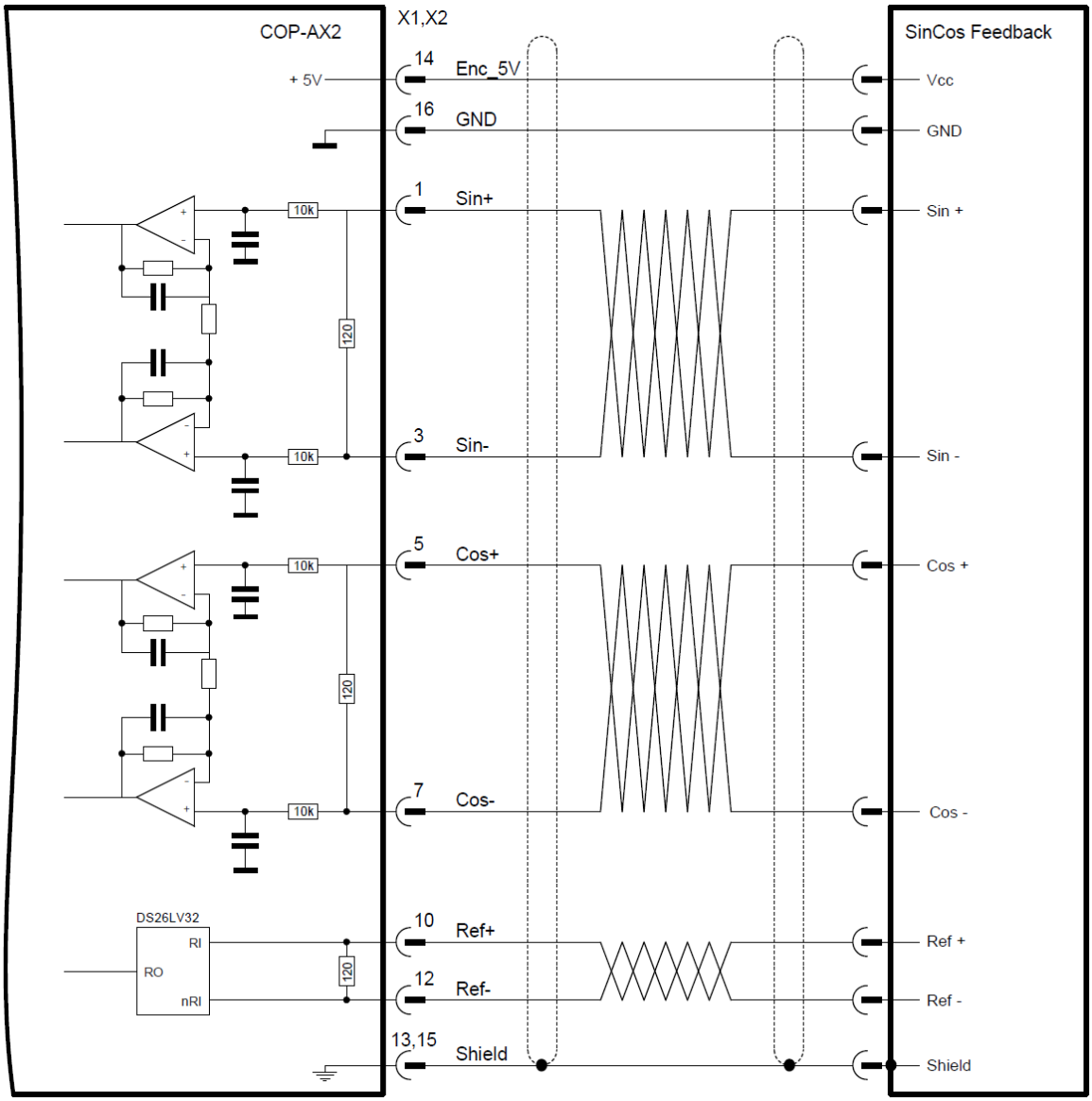

Hiperface Feedback

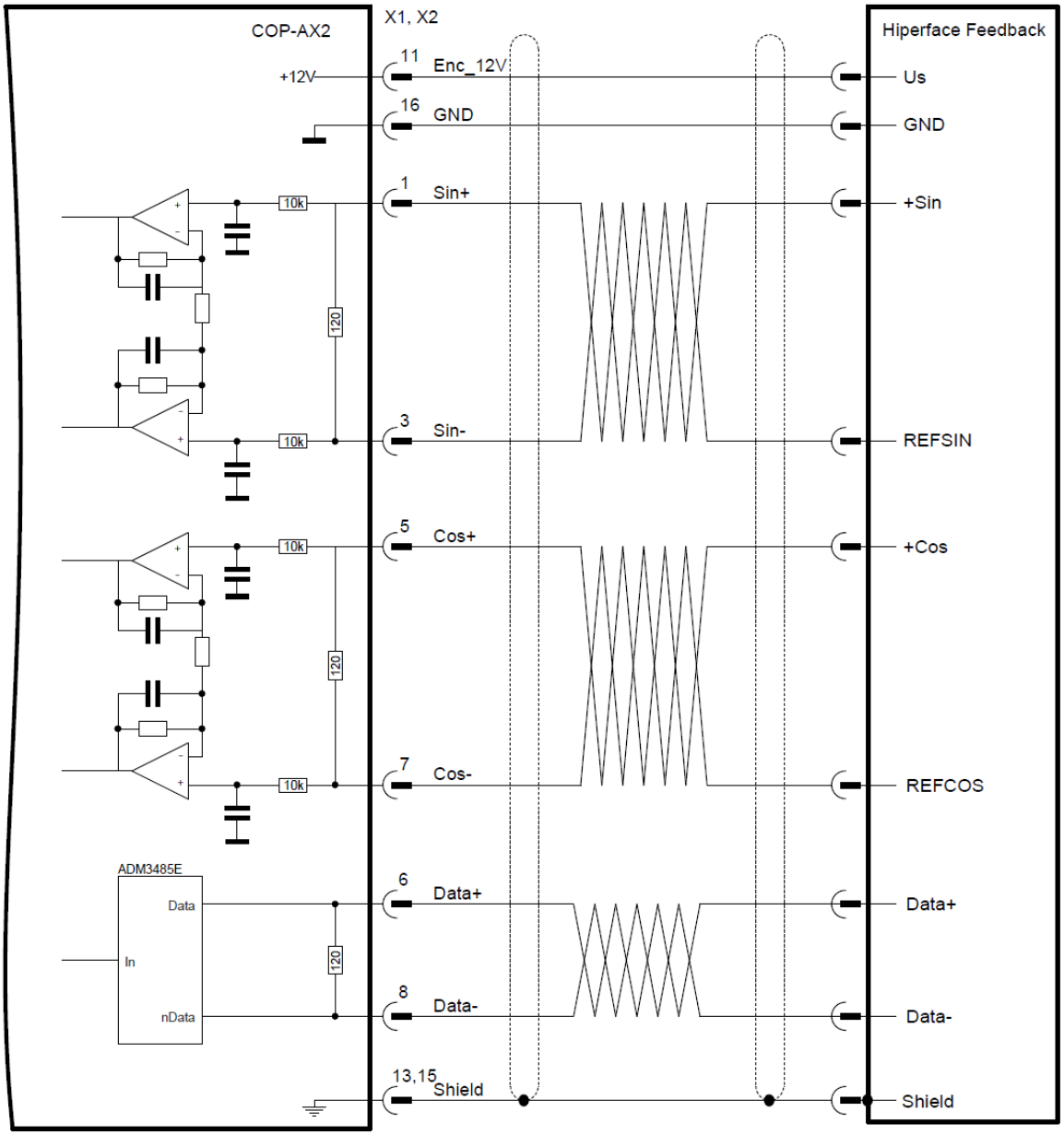

EnDat2.1 Feedback

If the supply voltage of the feedback system is >12V use Enc_12V (Pin 11) instead of Enc_5V.

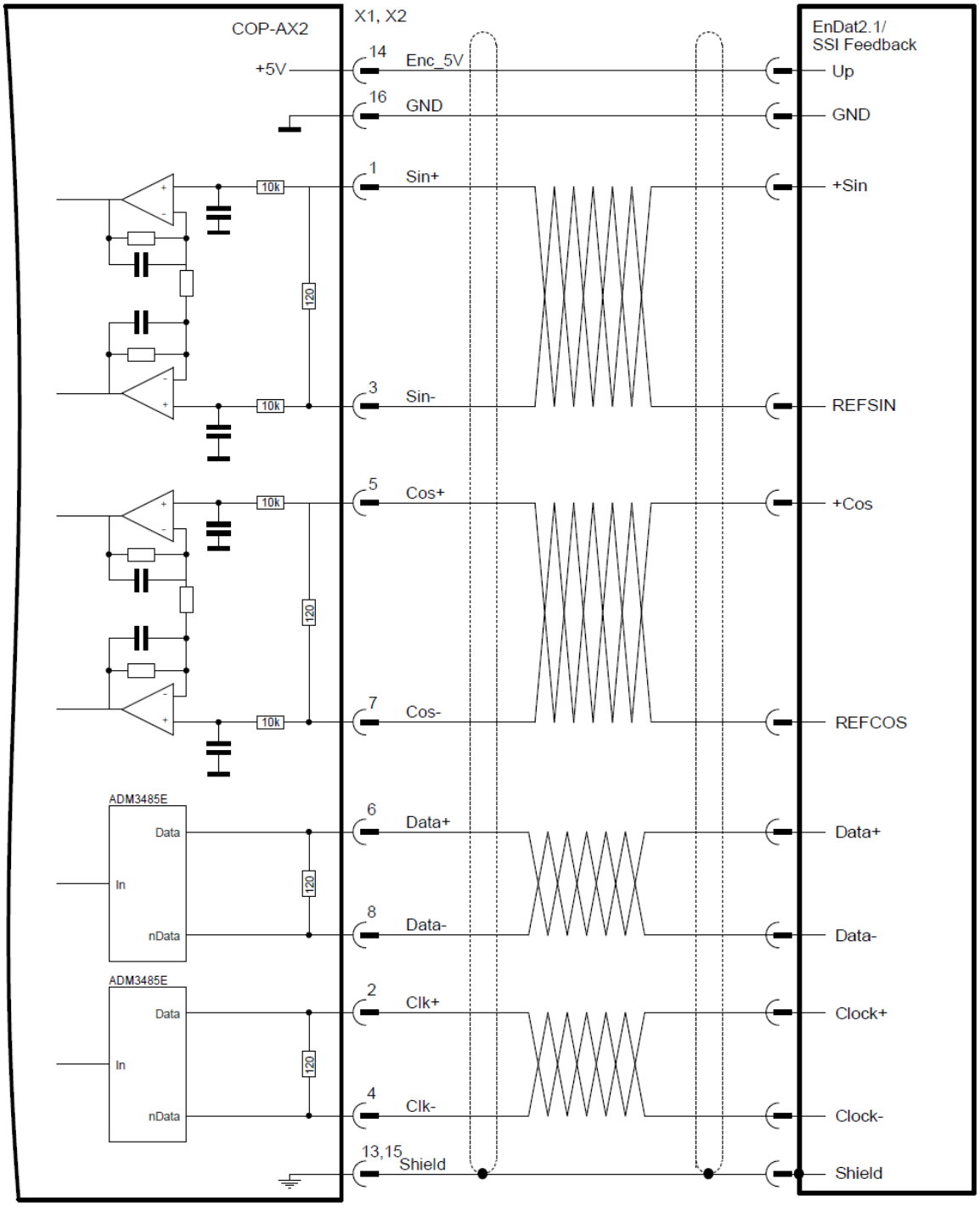

EnDat2.2 / BiSS-C Feedback

If the supply voltage of the feedback system is >12V use Enc_12V (Pin 11) instead of Enc_5V.

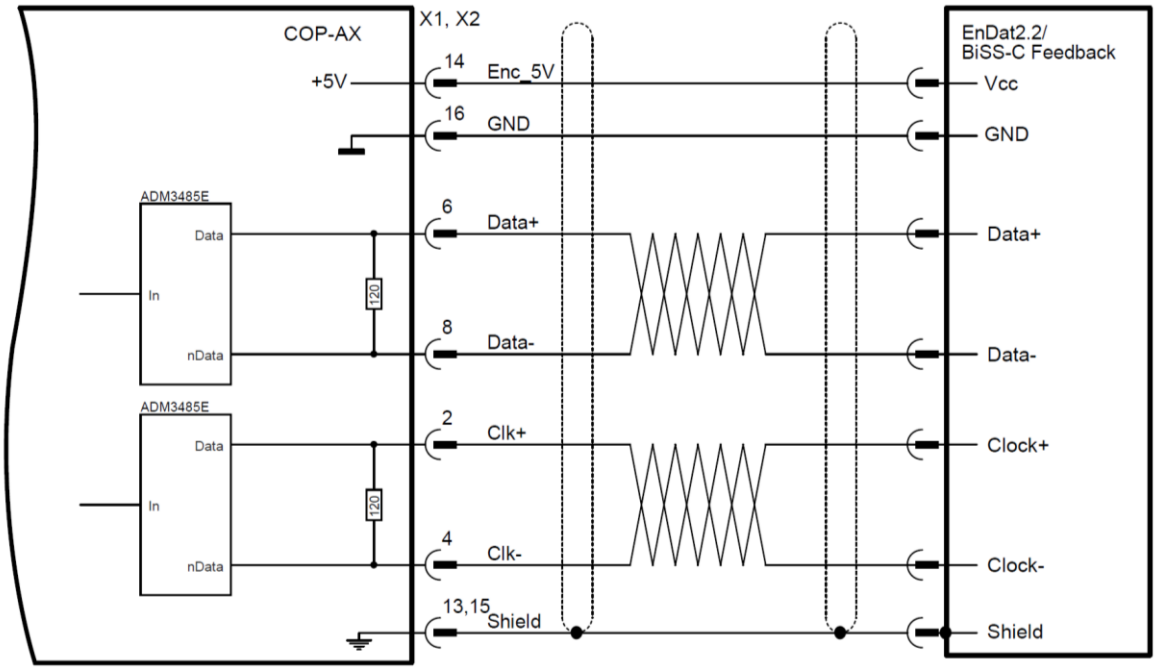

The purely digital control on the fast absolute encoders is currently not available for the COP modules!

12.4. Available Options

Item Number	Label	Option	Description
611552900	COP-AX2	72V	• 2x Motor output stage, • PM, SM, DC motors • SinCos- Feedback or • Encoder Feedback • Hiperface • EnDat 2.1 • SSI

13. COP-SSI (Encoder Module)

COP-SSI 611143000

The COP-SSI module has a total of six Interfaces with RS422/RS485 level. They can be used as digital incremental encoder feedbacks at SSI interfaces. In addition, the 5V power supply is led out externally so as, for example, to directly power encoders. Thus, you can do without an extra power source.

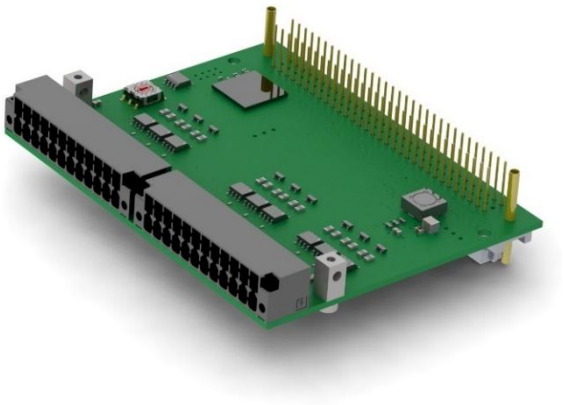

13.1. Technical Specifications

Incremental encoder feedback		
Number of possible digital incremental encoder feedbacks with A, B and zero tracks	6	
Level	RS422	
Maximum input frequency	2.5	MHz
Input impedance	120	Ω
SSI Interface		
Number of possible SSI Interfaces	6	
Maximum resolution	32	Bit
Input impedance	120	Ω
Module		
Maximum power consumption at 24V node power supply	200	mA

13.2. Pin Assignment

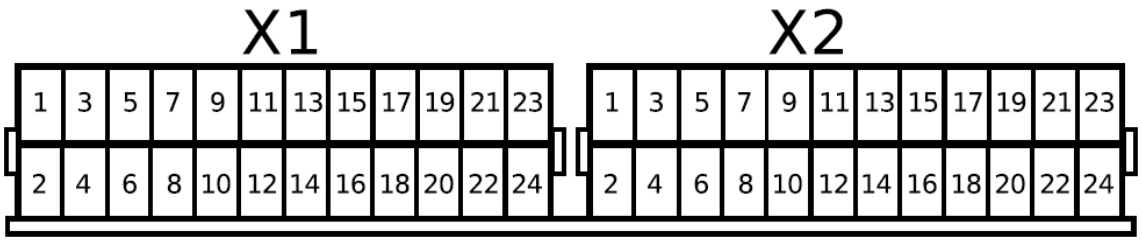

13.2.1. Incremental encoder feedback pin assignment

X1					
No.	Dir	Id.	Id.	Dir	No.
2	In	Inc 0 A-	Inc 0 A+	In	1
4	In	Inc 0 B-	Inc 0 B+	In	3
6	In	Inc 0 N-	Inc 0 N+	In	5
8		GND	Enc_5V	Out	7
10	In	Inc 1 A-	Inc 1 A+	In	9
12	In	Inc 1 B-	Inc 1 B+	In	11
14	In	Inc 1 N-	Inc 1 N+	In	13
16		GND	Enc_5V	Out	15
18	In	Inc 2 A-	Inc 2 A+	In	17
20	In	Inc 2 B-	Inc 2 B+	In	19
22	In	Inc 2 N-	Inc 2 N+	In	21
24		Shield	Shield		23

X2					
No.	Dir	Id.	Id.	Dir	No.
2	In	Inc 3 A-	Inc 3 A+	In	1
4	In	Inc 3 B-	Inc 3 B+	In	3
6	In	Inc 3 N-	Inc 3 N+	In	5
8		GND	Enc_5V	Out	7
10	In	Inc 4 A-	Inc 4 A+	In	9
12	In	Inc 4 B-	Inc 4 B+	In	11
14	In	Inc 4 N-	Inc 4 N+	In	13
16		GND	Enc_5V	Out	15
18	In	Inc 5 A-	Inc 5 A+	In	17
20	In	Inc 5 B-	Inc 5 B+	In	19
22	In	Inc 5 N-	Inc 5 N+	In	21
24		Shield	Shield		23

13.2.2. SSI pin assigment

X1					
No.	Dir	Id.	Id.	Dir	No.
2	Out	Clk 0-	Clk 0+	Out	1
4	In	Data 0-	Data 0+	In	3
6					5
8		GND	+5V	Out	7
10	Out	Clk 1-	Clk 1+	Out	9
12	In	Data 1-	Data 1+	In	11
14					13
16		GND	+5V	Out	15
18	Out	Clk 2-	Clk 2+	Out	17
20	In	Data 2-	Data 2-+	In	19
22					21
24		Shield	Shield		23

X2					
No.	Dir	Id.	Id.	Dir	No.
2	Out	Clk 3-	Clk 3+	Out	1
4	In	Data 3-	Data 3+	In	3
6					5
8		GND	+5V	Out	7
10	Out	Clk 4-	Clk 4+	Out	9
12	In	Data 4-	Data 4+	In	11
14					13
16		GND	+5V	Out	15
18	Out	Clk 5-	Clk 5+	Out	17
20	In	Data 5-	Data 5+	In	19
22					21
24		Shield	Shield		23

13.3. Hardware Description

RS422 interface

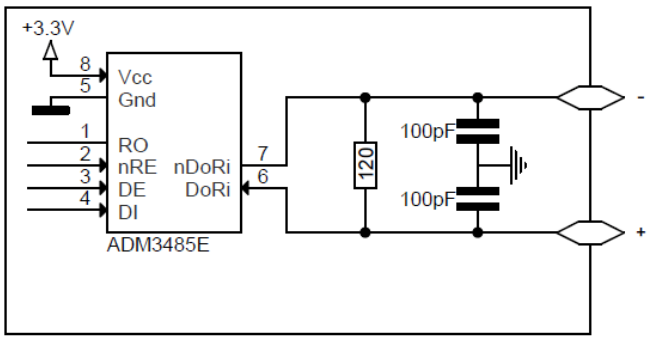

13.3.1. Available Options

Item Number	Label	Option	Description
611143000	COP-SSI		6 SSI/Inc inputs, RS422

14. COP-SL2 (Galvanometer-scanner control interface)

COP-SL2 611143070

The COP-SL2 module has especially been developed to integrate and control galvanometer-scanners from SCANLAB. The communication is carried out via the SL2-100 protocol.
Up to three scanner channels (X, Y, Z) can be connected to one module. The scanners are coordinated in real time to the other COP actors.
The scanner is connected via a standard D-Sub9 to the COP module. In this context, an external adapter is required, in which also the galvanic separation takes place. See connection example in section 14.3.

Picture

14.1. Technical Specifications

SL2-100 Interface		
Number of interfaces	1	
Level	RS 422	
Positioning resolution	20	Bit
Channels	3 (X, Y, Z)	
Sampling rate 2 channels (X, Y)	100	kHz
Sampling rate 3 channels (X, Y, Z)	50	kHz
Maximum cable lenght	25	m
Modul		
Maximum power consumption at 24V node power supply	200	mA

14.2. Pin Assignment

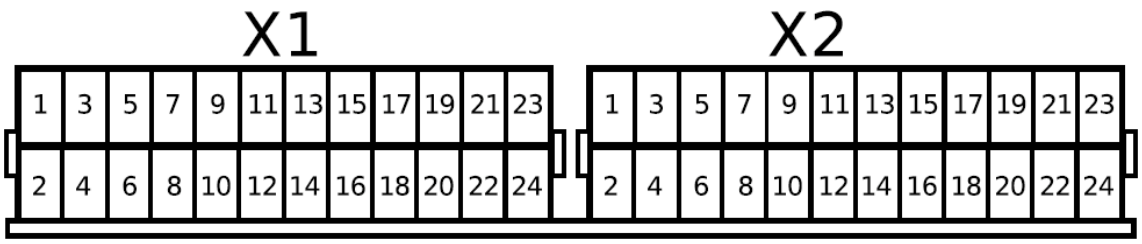

X1					
No.	Dir	Id.	Id.	Dir	No.
2	In	-XY_Tx	+XY_Tx	In	1
4	In	-XY_Rx	+XY_Rx	In	3
6	Out	-X_LaserOn	+X_LaserOn	Out	5
8		GND	+5V	Out	7
10	In	-ZT_Tx	+ZT_Tx	In	9
12	IN	-ZT_Rx	+ZT_Rx	In	11
14	Out	-Z_LaserOn	+Z_LaserOn	Out	13
16		GND	+5V	Out	15
18	In	-A2[1)]	+A2	In	17
20	In	-B2[1)]	+B2	In	19
22	In	-N2[1)]	+N2	In	21
24		Shield	Shield		23

X2					
No.	Dir	Id.	Id.	Dir	No.
2	Out	-X_LaserOn	+X_LaserOn	Out	1
4	In	-X_FastIn	+X_FastIn	In	3
6	In	-N3	+N3	In	5
8		GND	+5V	Out	7
10	Out	-Y_LaserOn	+Y_LaserOn	Out	9
12	In	-Y_FastIn	+Y_FastIn	In	11
14	In	-N4	+N4	In	13
16		GND	+5V	Out	15
18	Out	-Z_LaserOn	+Z_LaserOn	Out	17
20	In	-Z_FastIn	+Z_FastIn	In	19
22	In	-N5	+N5	In	21
24		Shield	Shield		23

1) Ax, Bx, Nx: Have no function at this time.

14.3. Connection Examples

Adapter to D-Sub 9 and internal galvanic separation for SCANLAB scan heads

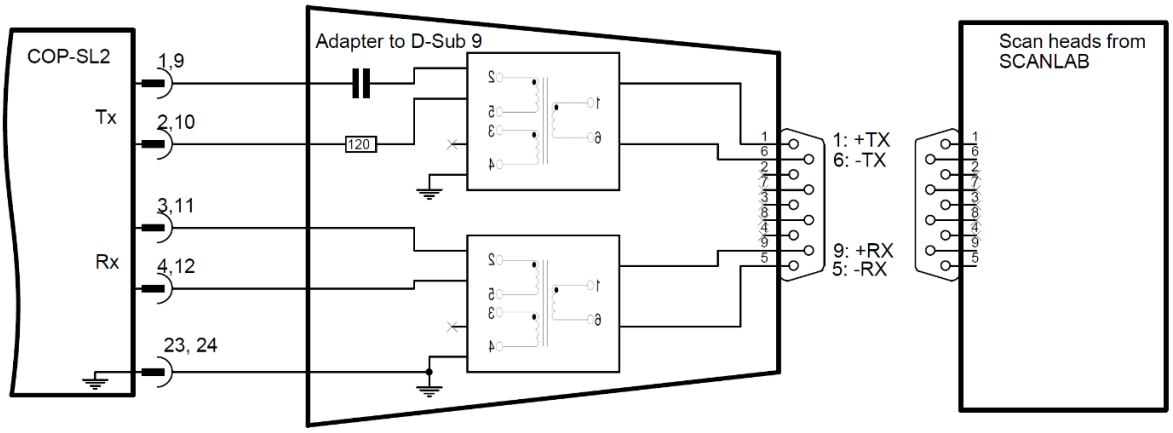

Connection of laser scanners over RS422

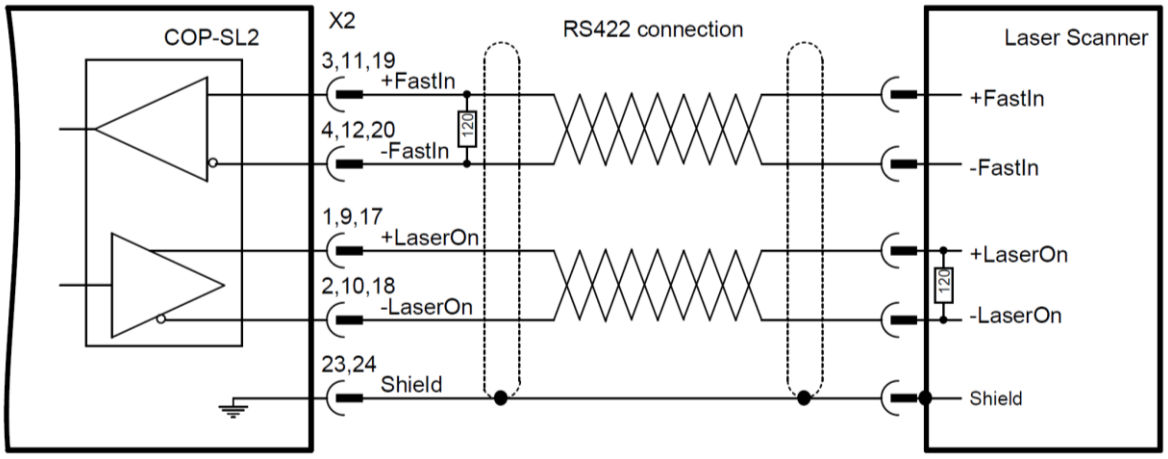

14.4. Available Options

Item Number	Label	Option	Description
611143070 *no longer available, but possibly still repairable*	COP-SL2		SL2-100 Interface • 1x Interface for Galvanometer-Scanner from Scanlab • 3x Channels for X, Y and Z • 3x RS422 Interfaces

15. COP-SHC (Laser scanner control interface)

COP-SHC 611855700

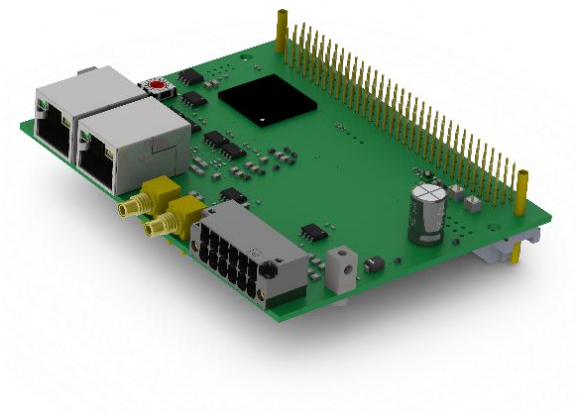

The COP-SHC module has specially been developed for the integration and control of laser scan heads from various producers. As example systems from Arges or SCANLAB. The Arges communication takes place via the HSSI protocol and the SCANLAB communication via the SL2-100 protocol.
Up to three scanner channels per module can be controlled and read back. The scanners are controlled synchronously with other actuators, such as multi servo drives and I/O systems.
Scan heads can easily be connected over a simple Ehternet cable (min. CAT5). The communications exchange takes place via an Ethernet cable (min. Cat 5). The COP-SHC module has fast digital outputs to control the laser enable or shutter coordinated to the axis movement. It is also possible to use the fast outputs as fast inputs, for example for trigger impulses. In addition, an RS485 or TTL level can be selected for the fast digital in- and outputs.

15.1. Technical Specifications

SL2-100 / HSSI-interface		
Number of Interfaces	1	
Level	RS 485	
Positioning resolution	20 (SL2-100) / 16 (HSSI)	Bit
Channels	3 (X, Y, Z)	
Sampling rate 2 channels (X, Y)	100	kHz
Sampling rate 3 channels (X, Y, Z)	50	kHz
Maximum cable lenght	25	m
Digital inputs 5V		
Number of inputs	2	
Rated voltage	5 ± 30%	V_{DC}
Switching threshold	$V_H \geq 1.9$ / $V_L \leq 1.2$	V_{DC}
Input low-pass filter cut-off frequency	2	kHz
Input impedance	11.5	kΩ

Digital inputs 24V		
Number of inputs	2	
Rated voltage	24 ± 30%	V_{DC}
Switching threshold	$V_H \geq 8.9$ / $V_L \leq 5.5$	V_{DC}
Input low-pass filter cut-off frequency	2	kHz
Input impedance	12	kΩ
Digital inputs TTL level (Fast_input)		
Number of inputs	2	
Rated voltage	5 ± 30%	V_{DC}
Switching threshold	$V_H \geq 2.3$ / $V_L \leq 0.9$	V_{DC}
Input impedance	10	kΩ
Digital outputs TTL level (Laser_On)		
Number of outputs	2	
Maximum output current per output	1	A
Maximum output current per output when every second output is loaded	2	A
Output impedance	50	Ω
Digital inputs RS485 level (Fast_input)		
Number of inputs	2	
Common-mode input voltage range	-7 to +12	V_{DC}
Switching threshold	$V_H \geq 0.2$ / $V_L \leq -0.2$	V_{DC}
Input impedance	50	kΩ
Digital outputs RS485 level (Laser_On)		
Number of outputs	2	
Maximum output current per output	± 250	mA
Output impedance	50	Ω
Module		
Maximum power consumption at 24V node power supply	200	mA

15.2. Pin Assignment

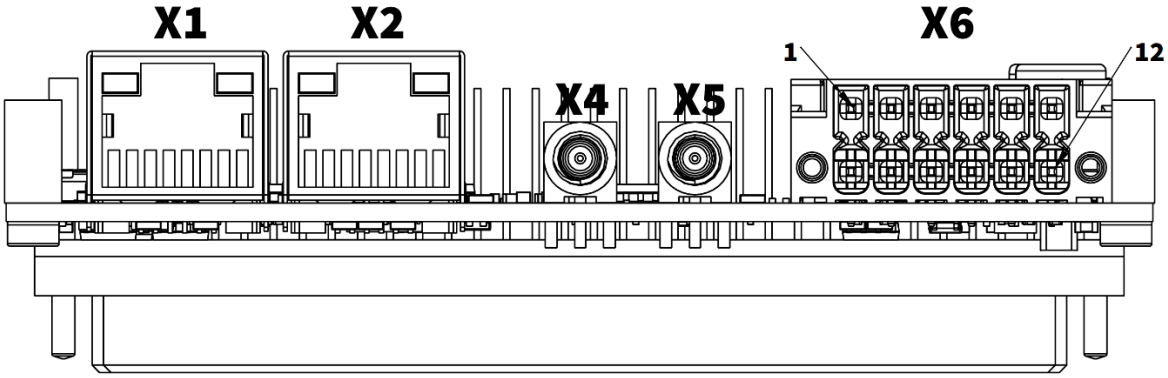

Identification	Pin No.	Description
X1 / X2	1	Tx0+
	2	Tx0-
	3	Rx0+
	4	Tx1+
	5	Tx1-
	6	Rx0-
	7	Rx1+
	8	Rx1-

Identification	Description
X4	Laser_On_X / Fast input[1)]
X5	Laser_On_Y / Fast input

1) Output and Input have TTL-Level

X6					
No.	Dir	Id.	Id.	Dir	No.
2		Laser_On_Y+	Laser_On_X+		1
4		Laser_On_Y-	Laser_On_X-		3
6		GND	GND		5
8	In	Din_24V	Din0_5V	In	7
10	In	Din_24V	Din1_5V	In	9
12	Out	+24V[2)]	+5V	Out	11

15.3. Connection Examples

RJ-45 to D-Sub9 adapter for SCANLAB scan heads

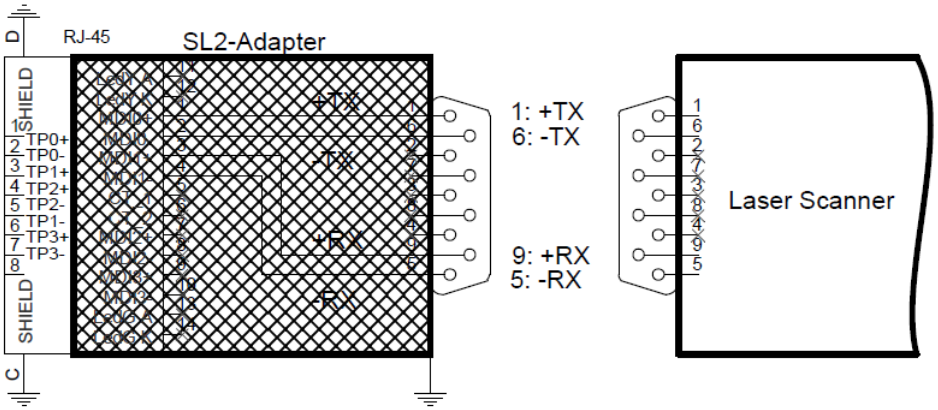

Connect a scan head over RJ-45 (for example Arges)

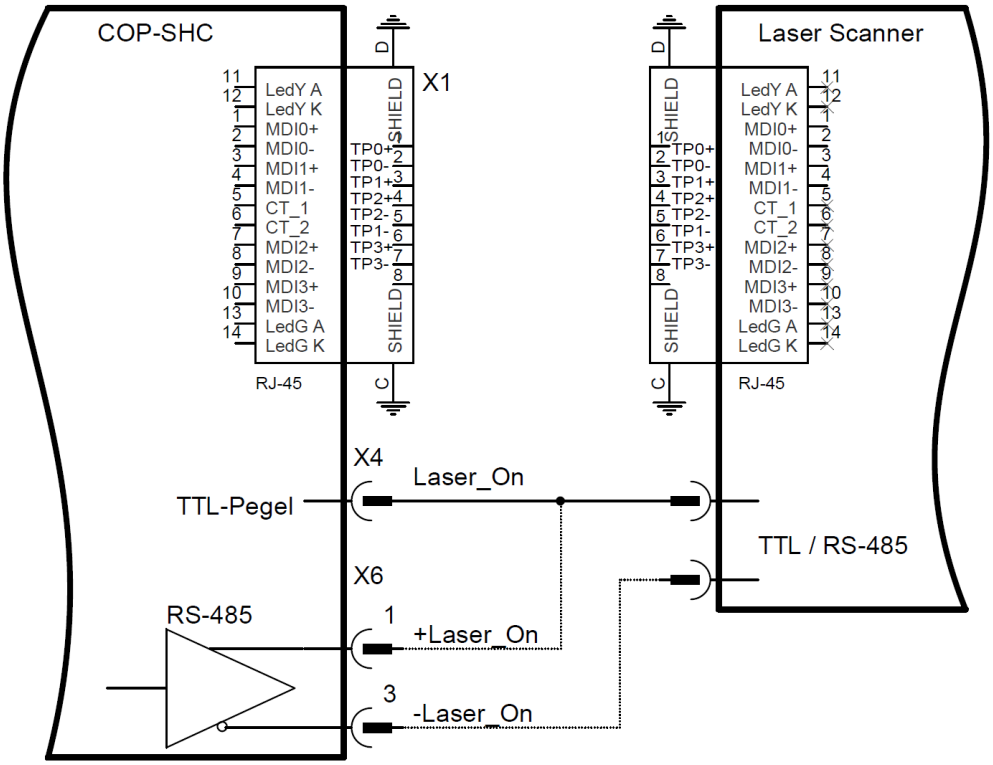

Connect a scan head over D-Sub9 (for example SCANLAB)

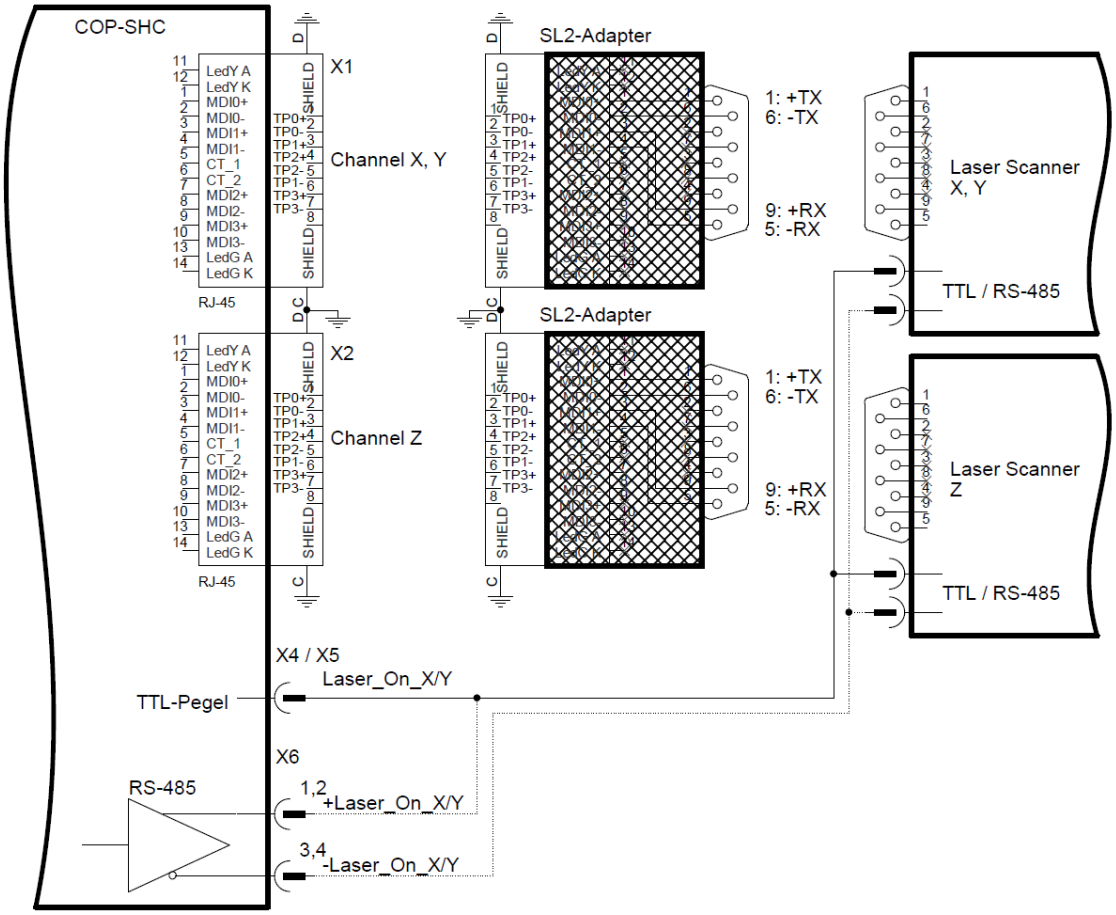

Ordering informations:

- When using the X and Y channels of COP-SHC (SL2), only 1 piece of the SL2 adapter is required.
- When using the X, Y, and Z channels, 2 pieces of the SL2 adapter are required.

Connection of digital scan head signals with RS485 level

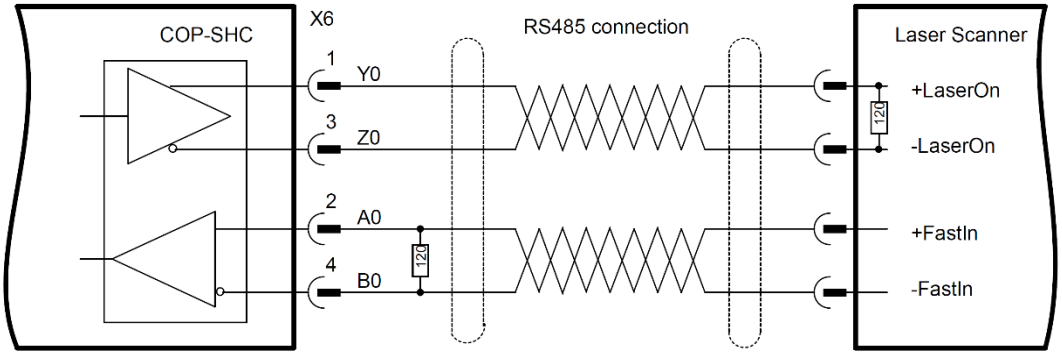

15.4. Available Options

Item Number	Label	Option	Description
611855720	COP-SHC	HSSI	• 1x HSSI protocol • 3x channels for X, Y and Z • 1x RJ-45 Interface • 1x RS485 Interface • 2x Fast digital inputs or outputs • 2x digital input for 5V and 24V • 1x Power supply 5V and 24V for pilot laser
611855740	COP-SHC	SL2	• 1x SL2-100 protocol • 3x channels for X, Y and Z • 2x RJ-45 Interface • 1x RS485 Interface • 2x Fast digital inputs or outputs • 2x digital input for 5V and 24V • 1x Power supply 5V and 24V for pilot laser

15.5. Accessories

Item Number	Label	Option	Description
611855745	SL2-Adapter		Adapter (RJ45 to D-SUB9 SL2-100 Scan-lab) for COP-SHC Option SL2

16. COP-ADA (Analogue IO)

COP-ADA 611042130

The COP-ADA module is equipped with eight fast analogues 16-bit inputs and outputs. The inputs are differential, and the outputs apply to the GND line of the COP node power supply. For the inputs, a hardware filter can be configured, which will average up to 64 sample values. In addition, there is a 10V power supply, including feedback, for connection to an external measuring bridge. The outputs can be configured as voltage or current outputs.

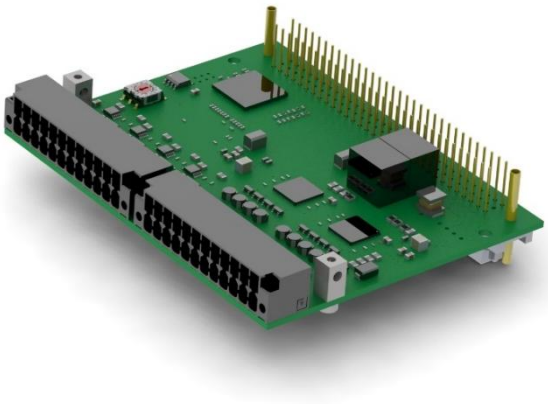

16.1. Technical Specifications

Analogue Inputs		
Number of inputs	8	
Technology	Differential	
ADC sampling rate	200	kHz
COP bus sampling rate	1 ... 16	kHz
Voltage ranges	± 0.1, ± 1, ± 10	V
Resolution	16	Bit
Deviation ±10 V / ± 1 V / ± 0.1V	< 0.01 / 0.01 / 0.02	% FSR[3)]
Input impedance	10	MΩ
Hardware filter [1)]	Mean value filter: 4, 32, 64 values	
Full scale drift	20	ppm/K
Common mode	± 12 relative to GND	V
Analogue Outputs		
Number of outputs	8	
Technology	Single-ended	
Sampling rate for all channels	16	kHz
Voltage range [2)]	0 ... 5, ± 10	V
Deviation Voltage Output	< 0.02	% FSR[3)]
Maximum output current in the voltage mode	16	mA
Current range [2)]	0 ... 20	mA
Resolution	16	Bit
Deviation Current Output	< 0.025	% FSR[3)]
Full scale drift	50	ppm/K

Measuring Bridge		
Bridge voltage	10	V
Minimum load resistance	250	Ω
Drift	50	ppm/K
Module		
Warm-up time	15	min
Maximum power consumption at 24V node power supply	260	mA

1) The hardware filter applies for all eight inputs.
2) Switching between different ranges during 120µs returns incorrect values on all channels.
3) FSR: Full-Scale Range. E.g. ± 10 V Range: FSR = 20V

16.2. Pin Assignment

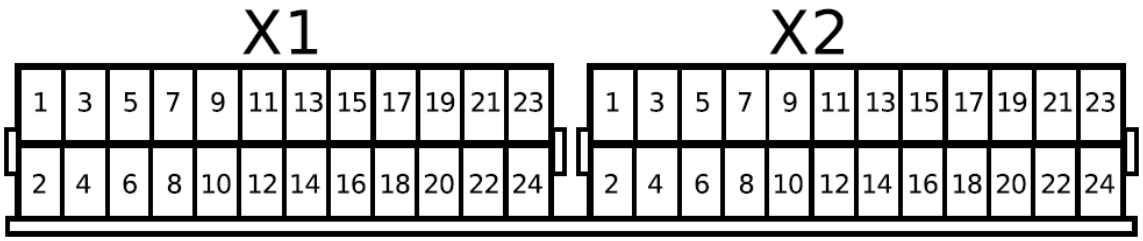

X1					
No.	Dir	Id.	Id.	Dir	No.
2	In	+A 01	+A 00	In	1
4	In	-A 01	-A 00	In	3
6		Shield	Shield		5
8	In	+A 03	+A 02	In	7
10	In	-A 03	-A 02	In	9
12		Shield	Shield		11
14	In	+A 05	+A 04	In	13
16	In	-A 05	-A 04	In	15
18		Shield	Shield		17
20	In	+A 07	+A 06	In	19
22	In	-A 07	-A 06	In	21
24		Shield	Shield		23

X2					
No.	Dir	Id.	Id.	Dir	No.
2	Out	A 01	A 00	Out	1
4		GND	GND		3
6	Out	A 03	A 02	Out	5
8		GND	GND		7
10	Out	A 05	A 04	Out	9
12		GND	GND		11
14	Out	A 07	A 06	Out	13
16		GND	GND		15
18		GND	GND		17
20	Out	-Vcc MB	+Vcc MB	Out	19
22	In	-FB MB	+FB MB	In	21
24		Shield	Shield		23

Remarks on the versions:

- In HW-Rev0 the pins 23 and 24 are connected to GND.
- From HW-RevA the pins are connected to the shield.

16.3. Connection Examples

Measuring bridge

The module has an extra interface for connection to a measuring bridge. The voltage of the measuring bridge is regulated by the module independently via feedback. The bridge voltage is measured using any of the COP-ADA card's analogue inputs.

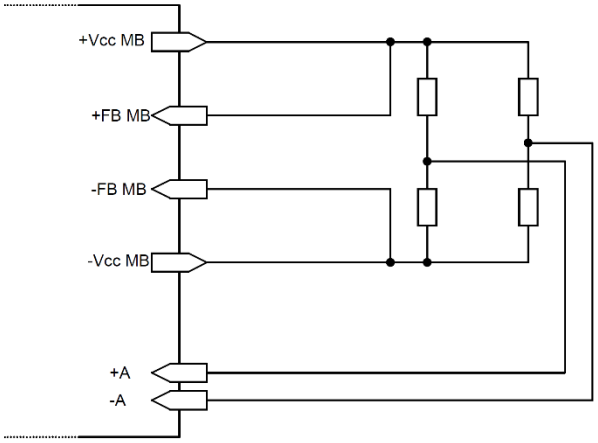

16.4. Available Options

Item Number	Label	Option	Description
611042130	COP-ADA		8 x ADC 16kHz, 16Bit, multi-range, 8 x DAC current and voltage outputs

17. COP-DEND (wire final checking)

COP-DEND 6113468xx

The COP-DEND was developed to measure the ohmic resistance of winded wires. This allows the user to calculate the length of the wire.

The COP-DEND is a complete COP-node, including the measurement PCB, the COP-MAS2 with special measurement Software and the case. We offer 2 versions with either 32 or 8 measurement Channels.

Version 611346810, 8 Channel

17.1. Technical Spezifications

Specifications		
Specified resistance measurement range	0.1 – 100‘000	Ohm
repetitive accuracy	< 2	%
Test current	0..24	mA
Channels	8 or 32	
Termination technique	4-Wire	
cables	shielded	
Line frequency filter	50 or 60	Hz

Remark:
These values are valid under labor conditions
Wounded Wires act like antennas and depending on geometry and electromagnetic fields of the environment, disturbances are coupled into the Wire. This may have an impact on the measurement.
A 4-wire connection should be used, means 2 wires for the test current and 2 wires for the measurement signal. A good contacting is very important for measurements of low omic resistances and should be done with kelvin contacts.

17.2. Pin Assignment

The pin assigned of the measurement PCB is the same as the COP-ADA.
The Pin-Pair “Analog out Ax/GND” and the Analog in +Ax / -Ax combine to the measurent channel x.

17.3. Hardware Description

The COP-DEND device uses COP-ADA PCBs as measurement hardware. The Software of the COP-DEND controls the measurent automatically. The analog outputs are used as Currentsources and supply the testcurrent to the wounded wire. The analog Inputs measure the voltage over the wounded wire. Testcurrent, ADC input range, filtering and calculation of the omic resistance is done by the software.
A software filter is selectable to either suppress 50 Hz or 60 Hz Line frequency disturbances.

17.4. Available Options

Art. Nr.	Label	Option	Description
611346832	COP-DEND	32Channel	Assembled COP-node for wire final checking. 4 Measurement PCBs with a total of 32 channels, incl. COP-MAS2 and Case.
611346810	COP-DEND	8Channel	Assembled COP-node for wire final checking. 1 Measurement PCBs with a total of 8 channels, incl. COP-MAS2 and Case

18. COP-ADA-PULS (Analogue IO/Digital IO/Pulsator)

COP-ADA-PULS 611042900

The COP-ADA-PULS module has four fast push-pull outputs, four analogue inputs and outputs as well as four digital 24V outputs and eight digital 24V inputs. The digital high side outputs are supplied from an external power source. It is possible to use an analogue input to conduct a PT100 measurement and an analogue output as a measuring current output.

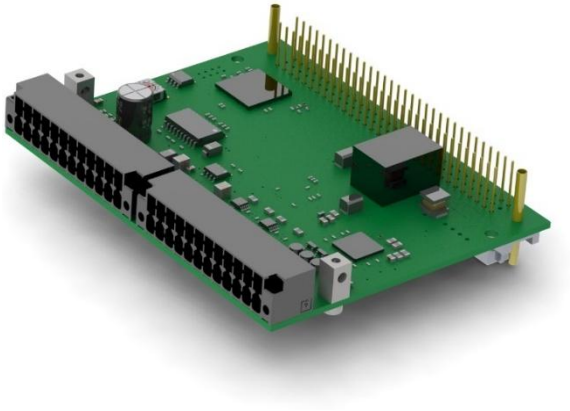

18.1. Technical Specifications

Pulsators		
Number of outputs	4	
Pulsator specifications	See section 18.3	
Maximum output current of 24V outputs [1) 2)]	50	mA
ROUT output resistance	50	Ω
Digital 24V Outputs		
Number of outputs	4	
Maximum output current per output	1	A
Maximum output current per output when every second output is loaded	2	A
Protection	Short-circuit proof	
Digital 24V Inputs		
Number of inputs	8	
Rated voltage	24 ± 30%	V_{DC}
Switching threshold	11.5	V_{DC}
Input low-pass filter cut-off frequency	1.6	kHz
Input impedance	12	kΩ

PT-100 Temperature Measurement		
Number of possible PT-100 measurements [3]	4	
Measuring range	-40 ... 250	°C
Sampling rate	4	kHz
Resolution	0.01	K
Relative accuracy [4]	0.5	K
Connection technology	Four-wire	
Analogue Inputs		
Number of inputs	4	
Technology	Differential	
ADC sampling rate	200	kHz
Voltage ranges	± 0.1, ± 1, ± 10	V
Resolution	16	Bit
Input impedance	10	MΩ
Hardware filter [5]	Mean value filter: 4, 32, 64 values	
Full scale drift	20	ppm/K
Common mode	± 12 relative to GND	V
Analogue Outputs		
Number of outputs	4	
Technology	Single-ended	
Sampling rate for all channels	16	kHz
Voltage range [6]	0 ... 5, ± 10	V
Maximum output current in the voltage mode	12	mA
Current range [6]	0 ... 20	mA
Resolution	16	Bit
Full scale drift	50	ppm/K
Module		
Warm-up time	15	min
Maximum power consumption at 24V node power supply	150	mA

1) If no external Vcc_PULS supply unit is connected, the PULS outputs are supplied with internal 5V power.
2) The PULS outputs are not short-circuit safe.
3) Each PT-100 measurement requires a DAC channel to be used as a power source and an ADC channel for measuring the voltage.
4) The value does not take into account the PT100 resistor's accuracy.
5) The hardware filter applies for all four channels.
6) Switching between different ranges during 120µs returns false values on all channels.

18.2. Pin Assignment

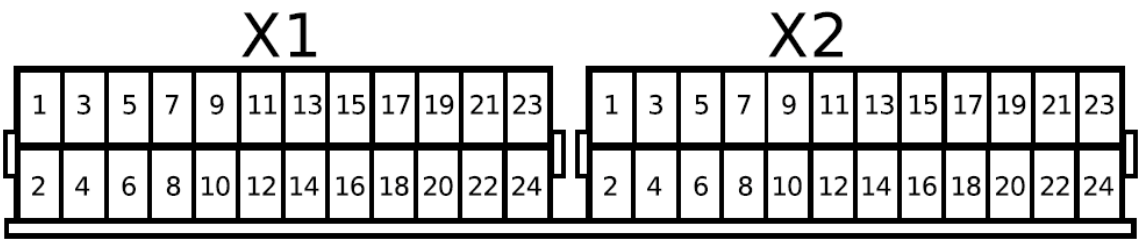

X1					
No.	Dir	Id.	Id.	Dir	No.
2	In	D 04	D 00	In	1
4	In	D 05	D 01	In	3
6	In	D 06	D 02	In	5
8	In	D 07	D 03	In	7
10		GND	GND		9
12		GND	Vcc IO		11
14	Out	D 02	D 00	Out	13
16	Out	D 03	D 01	Out	15
18		GND	GND		17
20	In	Vcc PULS23	Vcc PULS01	In	19
22	Out	PULS 2	PULS 0	Out	21
24	Out	PULS 3	PULS 1	Out	23

X2					
No.	Dir	Id.	Id.	Dir	No.
2	In	+A 01	+A 00	In	1
4	In	-A 01	-A 00	In	3
6		Shield	Shield		5
8	In	+ A 03	+A 02	In	7
10	In	-A 03	-A 02	In	9
12		Shield	Shield		11
14	Out	A 01	A 00	Out	13
16		GND	GND		15
18		Shield	Shield		17
20	Out	A 03	A 02	Out	19
22		GND	GND		21
24		Shield	Shield		23

18.3. Pulse Output Specifications

Resolution		
tON min	1	µs
tON max	1	s
td min	2	µs
td max	1	s
Number of pulses	1 ... endless	

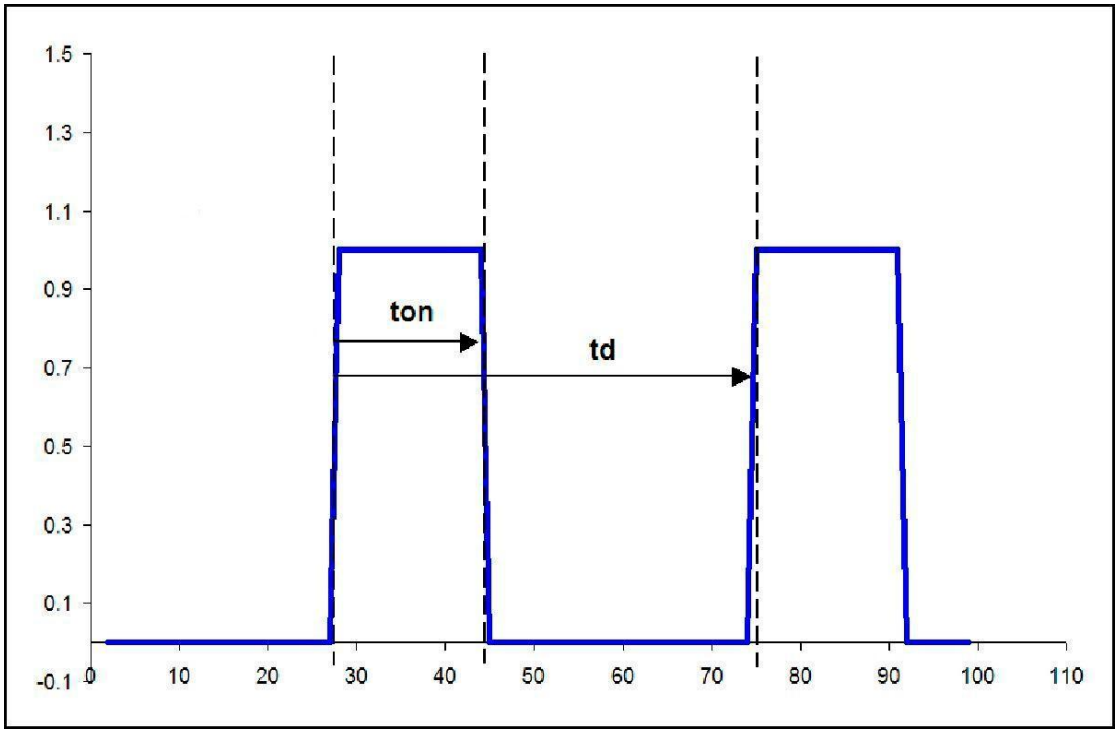

18.3.1. Delay Times

Time		
td(on) turn on delay	65	ns
tr rise time	16	ns
td(off) turn off delay	65	ns
tF fall time	14	ns

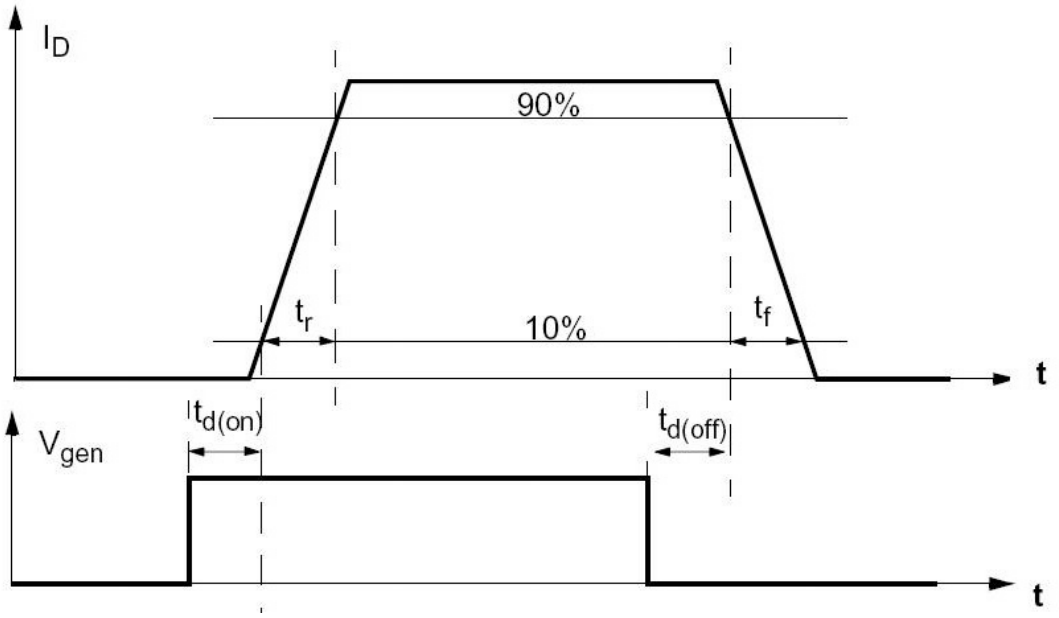

18.4. Hardware Description

Pulse outputs

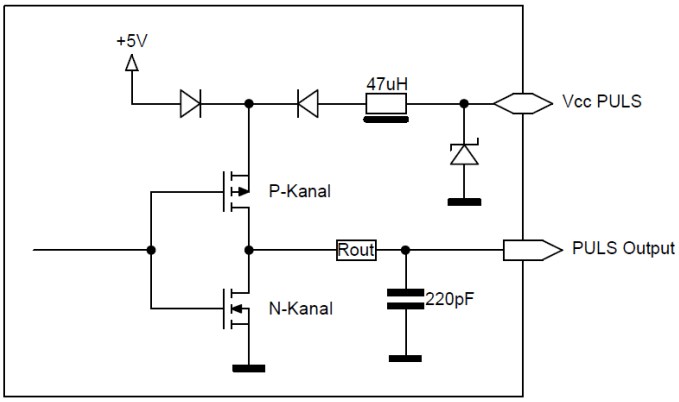

The four pulse outputs can be powered with 5...24V. The Vcc PULS01 supply unit provides power to outputs PULS 0 and 1, and the Vcc PULS23 supply unit outputs PULS 2 and PULS 3. If no power is applied to Vcc PULS01 and Vcc PULS23, the outputs are supplied with internal 5V power. The wires of the pulse outputs must be shielded. The shield should be applied to the mounting plate before the COP module using a fully contacting strap. Make sure that there is a good connection between the module's GND terminals and the earthing conductor of the 24V or Vcc PULS power supply.

PT-100

The analogue inputs can also be used as PT-100 inputs. The PT-100 sensors are connected directly to the module via four-wire lines. To prevent errors due to self-heating, the measuring current flows only during the measurement. Each PT-100 measurement requires an analogue output for the power source.

Digital inputs

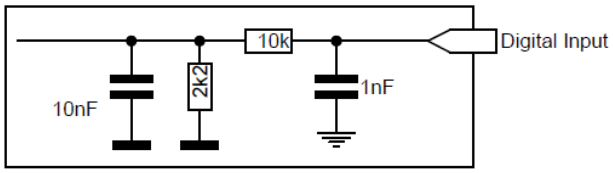

Digital outputs

The digital high side outputs are supplied from an external power source.
Vcc IO supplies power to D 00 to D 03

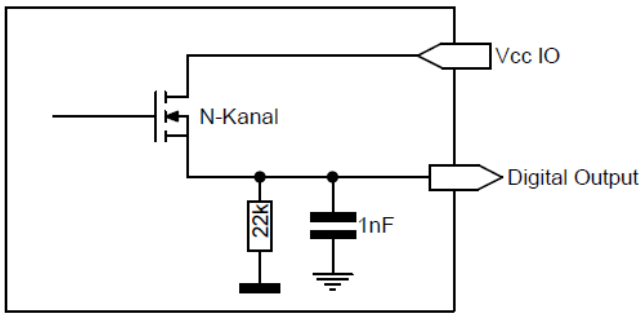

18.5. Available Options

Item Number	Label	Option	Description
611042900	COP-ADA-PULS		4 ADC/PT-100 inputs, 4 DAC current and voltage outputs, 4 PULS outputs, 8 digital inputs, 4 digital outputs

19. COP-IO (Digital IO)

COP-IO 611042400

The COP-IO card has 16 digital inputs and 16 digital outputs. The I/Os are not galvanically isolated and the reference potential is at GND of the COP node power supply. The digital high side outputs are supplied from an external power source. The input status is visible in the software.

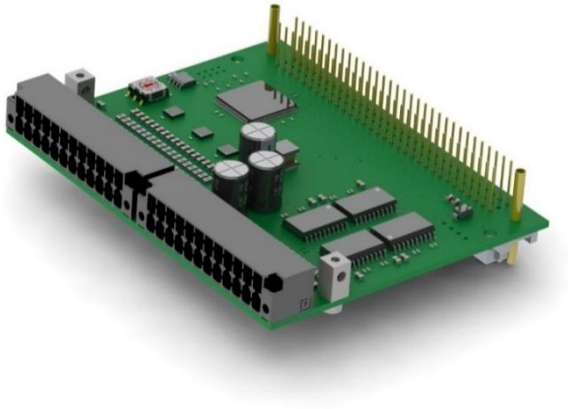

19.1. Technical Specifications

Digital Inputs		
Number of inputs	16	
Rated voltage	24 ± 30%	V_{DC}
Switching threshold	approx. 11.5	V_{DC}
Input low-pass filter cut-off frequency	1.6	kHz
Input impedance	12	kΩ
Digital Outputs		
Number of outputs	16	
Maximum output current per output	1	A
Maximum output current per output when every second output is loaded	2	A
Protection	Short-circuit proof	
Module		
Maximum power consumption at 24V node power supply	200	mA

19.2. Pin Assignment

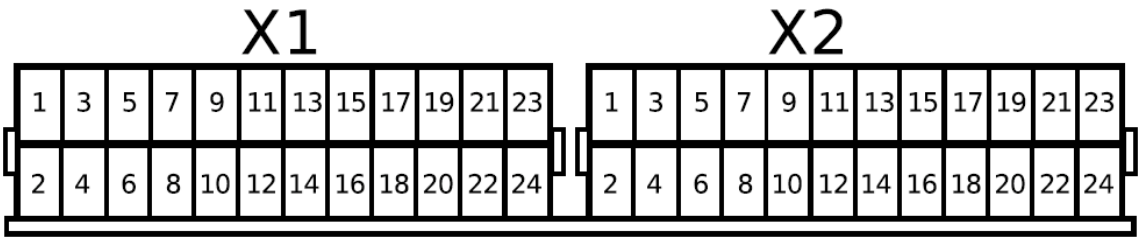

X1					
No.	Dir	Id.	Id.	Dir	No.
2	Out	+24V	+24V	Out	1
4	Out	+24V	+24V	Out	3
6		GND	GND		5
8		GND	GND		7
10	In	D 08	D 00	In	9
12	In	D 09	D 01	In	11
14	In	D 10	D 02	In	13
16	In	D 11	D 03	In	15
18	In	D 12	D 04	In	17
20	In	D 13	D 05	In	19
22	In	D 14	D 06	In	21
24	In	D 15	D 07	In	23

X2					
No.	Dir	Id.	Id.	Dir	No.
2	In	VccIO2[1)]	Vcc IO1[1)]	In	1
4	In	VccIO2[1)]	Vcc IO1[1)]	In	3
6		GND	GND		5
8		GND	GND		7
10	Out	D08	D00	Out	9
12	Out	D09	D01	Out	11
14	Out	D10	D02	Out	13
16	Out	D11	D03	Out	15
18	Out	D12	D04	Out	17
20	Out	D13	D05	Out	19
22	Out	D14	D06	Out	21
24	Out	D015	D07	Out	23

Two separate output power supply sources:

- Vcc IO1 for D 00 to D07
- Vcc IO2 for D 08 to D15

19.3. Hardware Description

Digital inputs

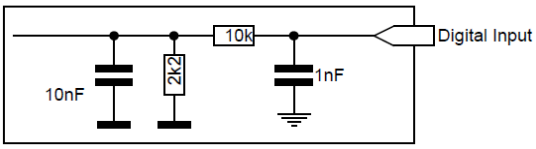

Digital outputs

The digital high side outputs are supplied from an external power source. There are two separete power supply sources.
Vcc IO1 supplies power to D 00 to D 07
Vcc IO2 supplies power to D 08 to D 15

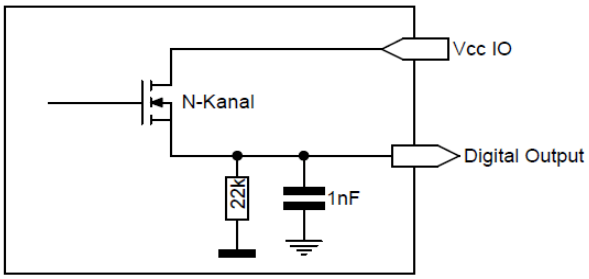

19.4. Available Options

Item Number	Label	Option	Description
611042400	COP-IO		16 digital inputs, 16 digital outputs, 2A max, short-circuit proof

20. COP-IIO (Isolated Digital IO)

COP-IIO 611246500

The COP-IIO card offers a total of 12 isolated inputs and 12 isolated outputs. The IOs are galvanically isolated from power supply of the COP node. The card can be used, for example, when inputs or outputs have a different potential than power supply of the the COP node itself.

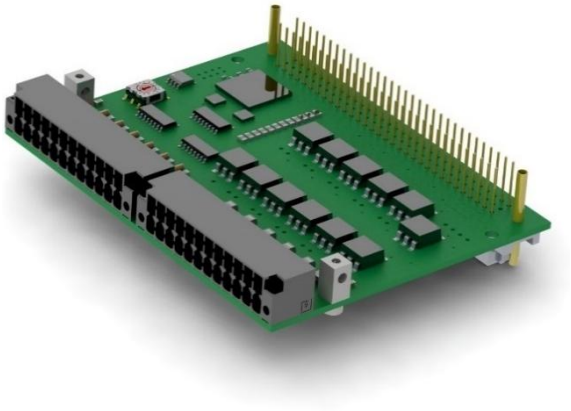

20.1. Technical Specifications

Isolated Inputs		
Number of inputs	12	
Maximum input voltage	32	V_{DC}
Switching threshold	12 ±10%	V_{DC}
Input low-pass filter cut-off frequency	800	Hz
Isolated Outputs		
Number of outputs	12	
Maximum output current per output	1	A
Maximum switching voltage	32	V_{DC}
Module		
Maximum power consumption at 24V node power supply	200	mA

20.2. Pin Assignment

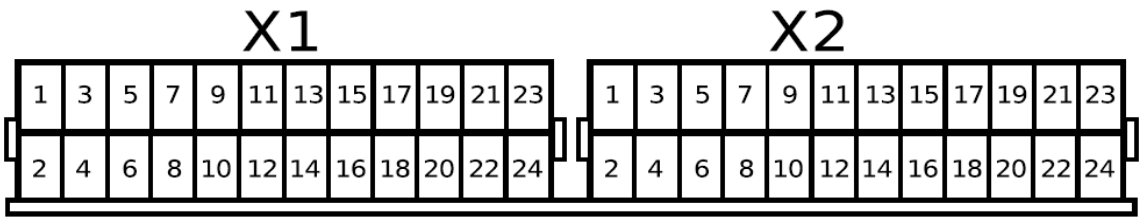

X1					
No.	Dir	Id.	Id.	Dir	No.
2	In	+D01	+D00	In	1
4	In	-D01	-D00	In	3
6	In	+D03	+D02	In	5
8	In	-D03	-D02	In	7
10	In	+D05	+D04	In	9
12	In	-D05	-D04	In	11
14	In	+D07	+D06	In	13
16	In	-D07	-D06	In	15
18	In	+D09	+D08	In	17
20	In	-D09	-D08	In	19
22	In	+D11	+D10	In	21
24	In	-D11	-D10	In	23

X2					
No.	Dir	Id.	Id.	Dir	No.
2	Out	+D01	+D00	Out	1
4	Out	-D01	-D00	Out	3
6	Out	+D03	+D02	Out	5
8	Out	-D03	-D02	Out	7
10	Out	+D05	+D04	Out	9
12	Out	-D05	-D04	Out	11
14	Out	+D07	+D06	Out	13
16	Out	-D07	-D06	Out	15
18	Out	+D09	+D08	Out	17
20	Out	-D09	-D08	Out	19
22	Out	+D11	+D10	Out	21
24	Out	-D11	-D10	Out	23

20.3. Hardware Description

Digital inputs

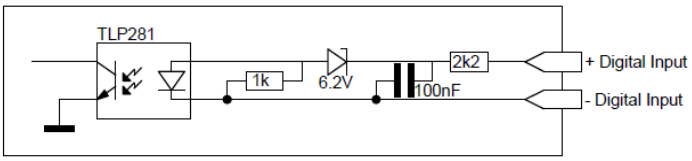

0Digital outputs

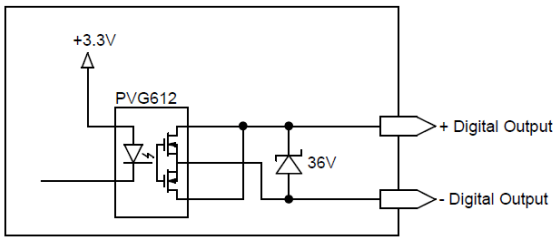

20.4. Available Options

Item Number	Label	Option	Description
611246500	COP-IIO		12 x isolated digital inputs and outputs

21. COP-PTC (Peltier Output Stage)

COP-PTC 6111434xx

The COP-PTC can be connected to up to two Peltier elements. Temperature is controlled via PT-100 measuring resistors. The Peltier element can be used for both heating and cooling.

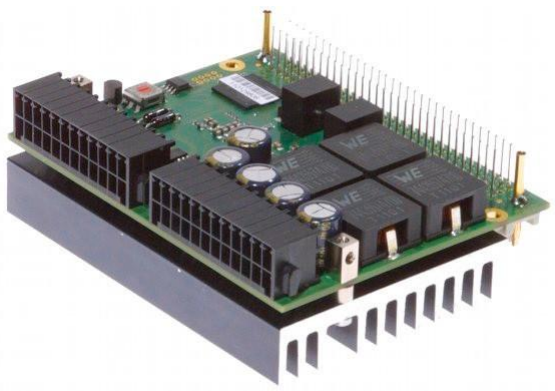

21.1. Technical Specifications

Peltier Element		
Number of power outputs	1 or 2 (see also 16.5 on page 61)	
Output voltage	± 48	V
Output current at channel 1	10	A
Output current at channel 2	5 per channel	A
Vcc PWR power supply	18 ... 48	V
Maximum Vcc PWR power consumption	10	A
PT-100		
Number PT-100 inputs	4	
Measuring ranges	-80 ... 460	°C
Sampling rate	100	Hz
Resolution	0.02	K
Accuracy [1)]	0.5	K
Full scale drift	5	ppm/K
Connection technology	Four-wire	
Module		
Warm-up time	15	min
Maximum power consumption at 24V node power supply	150	mA

1) The value does not take into account the PT100 resistor's accuracy.

21.2. Pin Assignment

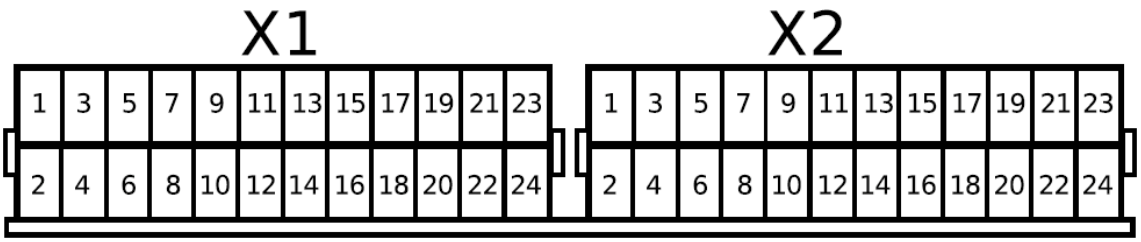

X1					
No.	Dir	Id.	Id.	Dir	No.
2	Out	A 01	A 00	Out	1
4		GND	GND		3
6	In	+A 01	+A 00	In	5
8	In	-A 01	-A 00	In	7
10	Out	A 03	A 02	Out	9
12		GND	GND		11
14	In	+A 03	+A 02	In	13
16	In	-A 03	+A 02	In	15
18		Shield	Shield		17
20		GND	+24V	Out	19
22	In	D 01	D 00	In	21
24		Shield	Shield		23

X2					
No.	Dir	Id.	Id.	Dir	No.
2	In	Vcc PWR1)	Vcc PWR1)	In	1
4		GND1)	GND1)		3
6	Out	PWR_B 0	PWR_A 0	Out	5
8	Out	PWR_B 1	PWR_A 1	Out	7
10		GND	GND		9
12	In	Vcc IO	Vcc IO	In	11
14		GND	GND		13
16	Out	D 01	D 00	Out	15
18	Out	D 03	D 02	Out	17
20		GND	GND		19
22		GND	GND		21
24		Shield	Shield		23

Two pins need to be used for the power supply.
Maximum current load per pin (section 5.3.1)

21.3. Hardware Description

PT-100

The PT-100 sensors are connected directly to the module via four-wire lines. To prevent errors due to self-heating, the measuring current flows only during the measurement. Two high-precision reference resistors, the properties of which are stored in the EEPROM, are integrated into the module for automatic zero point and full-scale calibration.

Digital inputs

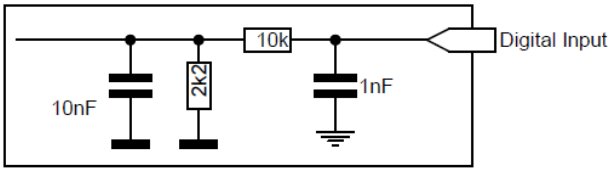

Digital outputs

The digital high side outputs are supplied from an external power source.
Vcc IO supplies power to D 00 to D 03

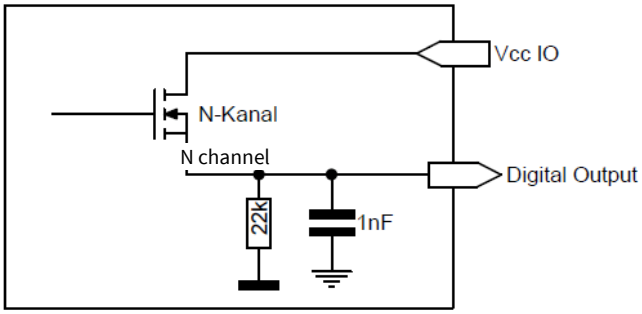

21.4. Connection Examples

When wiring, please note that the COP-PTC module outputs a positive voltage for heating and a negative voltage for cooling. With the Peltier elements, on the other hand, a positive voltage for cooling is often specified.

Channel 1 COP-PTC
For channel 1 PTC modules, outputs +PWR 0 and -PWR0 or, as the case may be, +PWR 1 and -PWR1 must be short-circuited. The maximum current load per terminal pin: See section 5.3.1.

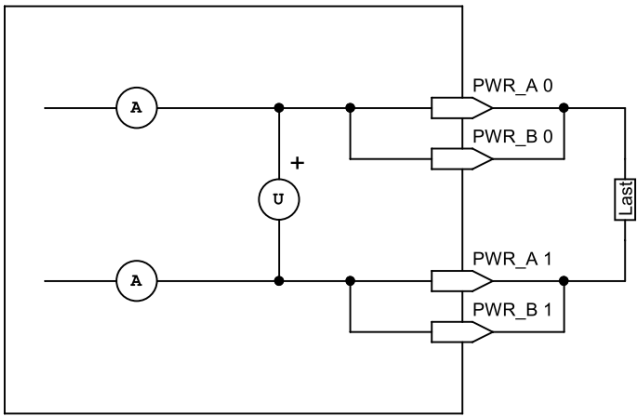

Chanel 2 COP-PTC

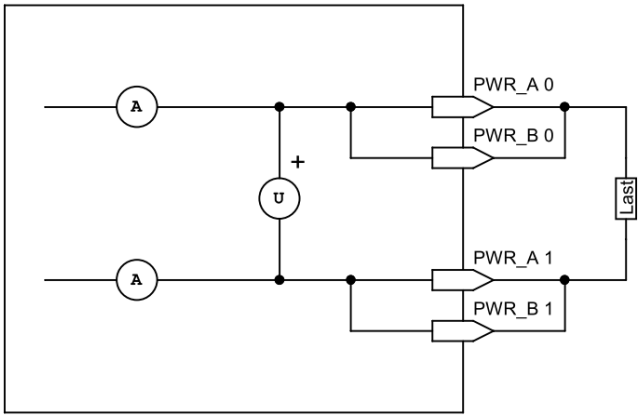

21.5. Available Options

Item Number	Label	Option	Description
611143410	COP-PTC	1x10A	1-channel peltier element final stage
611143400	COP-PTC	2x5A	2-channel peltier element final stage

22. COP-MC2 (Moving Coil Controller)

COP-MC2 611143440

The COP-MC2 has been specially developed for the controlling of moving coils. The output stage is based on the COP-PTC module.
This module can be operated with two output currents ± 5A or can be doubled to ± 10A by using to the two output currents in parallel. The PWM output is additionally filtered so that no PWM frequencies are visible on the coil.
The controlling is carried out by means of a PI controller.

Picture

22.1. Technical Specifications

Moving coil		
Number of power outputs	1 or 2	
Output voltage	± 48	V
Output current at channel 1	10	A
Output current at channel 2	5 per channel	A
Vcc PWR power supply	18 ... 48	V
Maximum Vcc PWR power consumption	10	A
Modul		
Warm-up time	15	min
Maximum power consumption at 24V node	150	mA

22.2. Pin Assignment

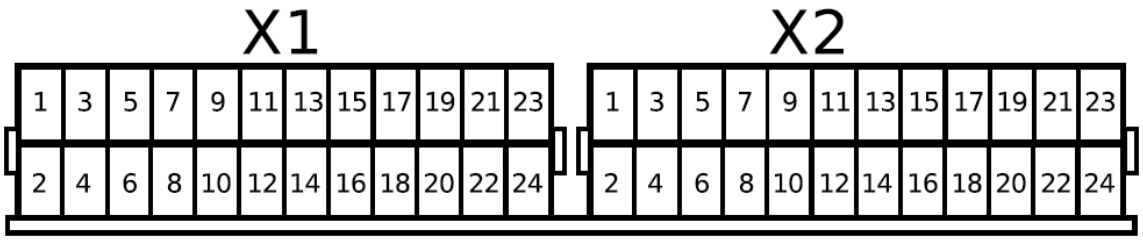

X1					
Nr	Dir	Bez	Bez	Dir	Nr
2					1
4					3
6					5
8					7
10					9
12					11
14					13
16					15
18		Shield	Shield		17
20		GND	+24V	Out	19
22					21
24		Shield	Shield		23

X1: Connector is usually not used

X2					
Nr	Dir	Bez	Bez	Dir	Nr
2	In	+PWR	+PWR	In	1
4		GND	GND		3
6	Out	-Pout0	+Pout0	Out	5
8	Out	-Pout1	+Pout1	Out	7
10		GND	GND		9
12					11
14		GND	GND		13
16					15
18					17
20		GND	GND		19
22		GND	GND		21
24		Earth	Earth		23

22.3. Connection Examples

See COP-PTC chapter 21.4.

22.4. Available Options

Art. Nr.:	Label	Option	Beschreibung
611143440	COP-MC2		Two channel moving coil controller

23. COP-PVC (Programmable Power Source)

COP-PVC 611143800

The COP-PVC is a freely programmable power source with configurable current limitation. The voltage range varies from 0 to 50V, and the current range from 0 to 15A. If the predefined maximum current is exceeded, the load current is limited to a specific value. The current limitation's response can be recognised via software.

23.1. Technical Specifications

Output		
Number of power outputs	1	
Output voltage	0 to 50	V_{DC}
Maximum output current	15	A
Resolution	16	Bit
Input		
Input voltage	Up to 50	V_{DC}
Module		
Maximum power consumption at 24V node power supply	100	mA

Remarks:

- The COP-PVC can be operated with the COP-PAS only if the PVC option is installed. It should be integrated directly into the COP-PAS module.
- Due to the heat sink two COP slots per COP-PVC module are needed.

23.2. Pin Assignment

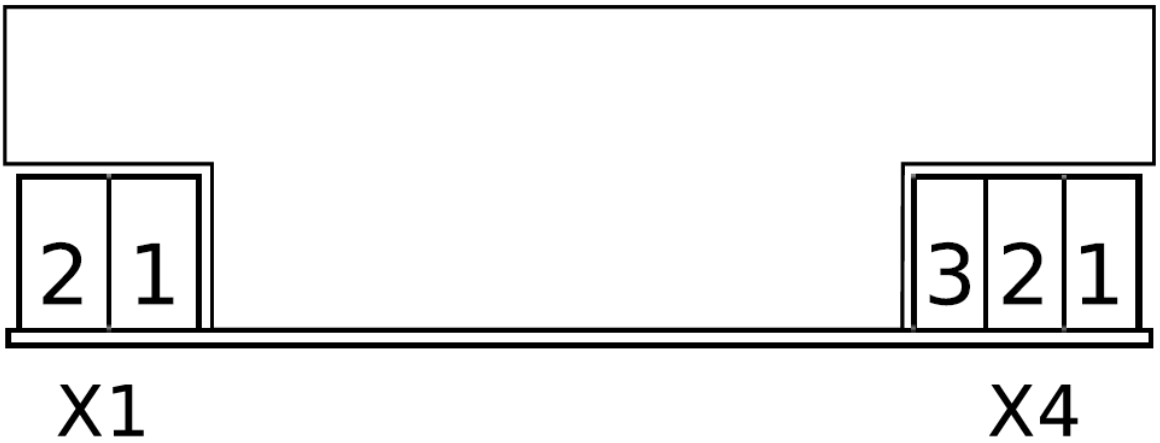

Identification	Pin No.	Description
X1	1	-Vout
	2	+Vout

Identification	Pin No.	Description
X4	1	+Vin
	2	-Vin
	3	Earth

23.3. Available Options

Item Number	Label	Option	Description
611143800	COP-PVC		Adjustable power source 15-50V_{DC}, 15A

23.4. Accessories

Item Number	Label	Option	Description
611143601	COP-PAS	PVC	Passive GinLink Slave bus coupler for COP modules, 5VPS, 3.3VPS Special version for the COP-PVC

24. COP-PIEZO (Piezo Output Stage)

COP-PIEZO 611346900

The COP-PIEZO module has two piezo output stages. The required intermediate circuit power is either generated by the module itself and supplied via step-up circuit or supplied from an external power source. The step-up circuit is activated as soon as the rated voltage is applied to Vcc and the Ucc voltage is generated. The power section is isolated from the logics.

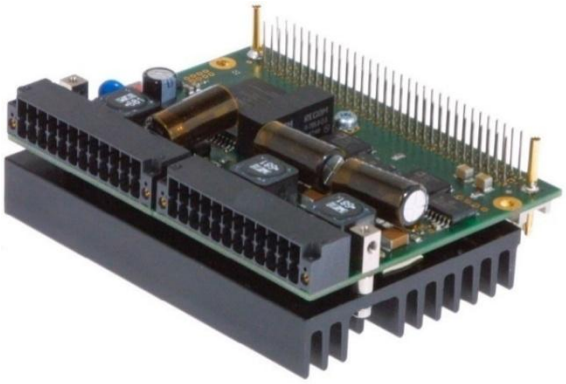

24.1. Technical Specifications

Output Stages and Intermediate Circuit		
Number of output stages	2	
Maximum continuous power (both output stages)	5	W
Intermediate circuit power supply via integrated step-up circuit	150	V_{DC}
Slew rate	30	V/ms
Intermediate circuit capacity	66	uF
Vcc_24V power supply rated voltage	24	V_{DC}
PIEZO_Ucc power supply rated voltage	24 ... 180	V_{DC}
Module		
Maximum power consumption at 24V node power supply	200	mA

24.2. Pin Assignment

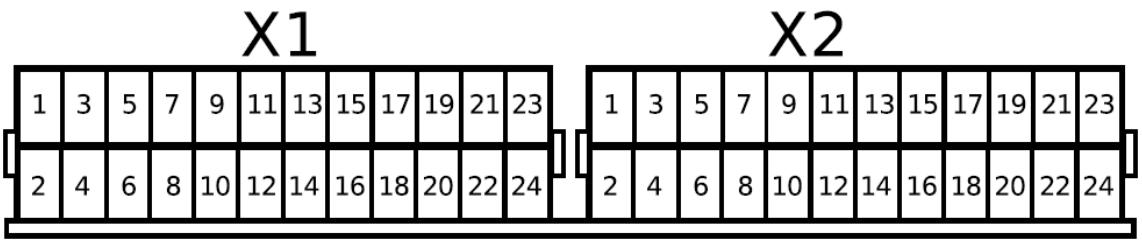

X1					
No.	Dir	Id.	Id.	Dir	No.
2					1
4	In	Vcc_24v	Vcc_24V	In	3
6		PIEZO_GND	PIEZO_GND		5
8					7
10					9
12					11
14					13
16		PIEZO_GND	PIEZO_GND		15
18					17
20	In	PIEZO_Ucc	PIEZO_Ucc	In	19
22					21
24		Shield	Shield		23

X2					
No.	Dir	Id.	Id.	Dir	No.
2	Out	POut 0	POut 0	Out	1
4					3
6		PIEZO_GND	PIEZO_GND		5
8					7
10					9
12					11
14	Out	POut 1	POut 1	Out	13
16					15
18		PIEZO_GND	PIEZO_GND		17
20					19
22					21
24		Shield	Shield		23

Remarks:

- The low-voltage sections is isolated from the rest of the COP module.
- Due to the heat sink, the COP-PIEZO requires two COP slots.

24.3. Low Voltage

With the COP-PIEZO, low voltages occur. The Low-Voltage Directive has to be observed by the user. Contact with low voltages may result in death or severe bodily injury or property damage. The measures described in section 2.1.5 to protect against contact with electrical parts must be observed.

24.4. Connection Examples

Connection of two piezo elements and step-up power supply

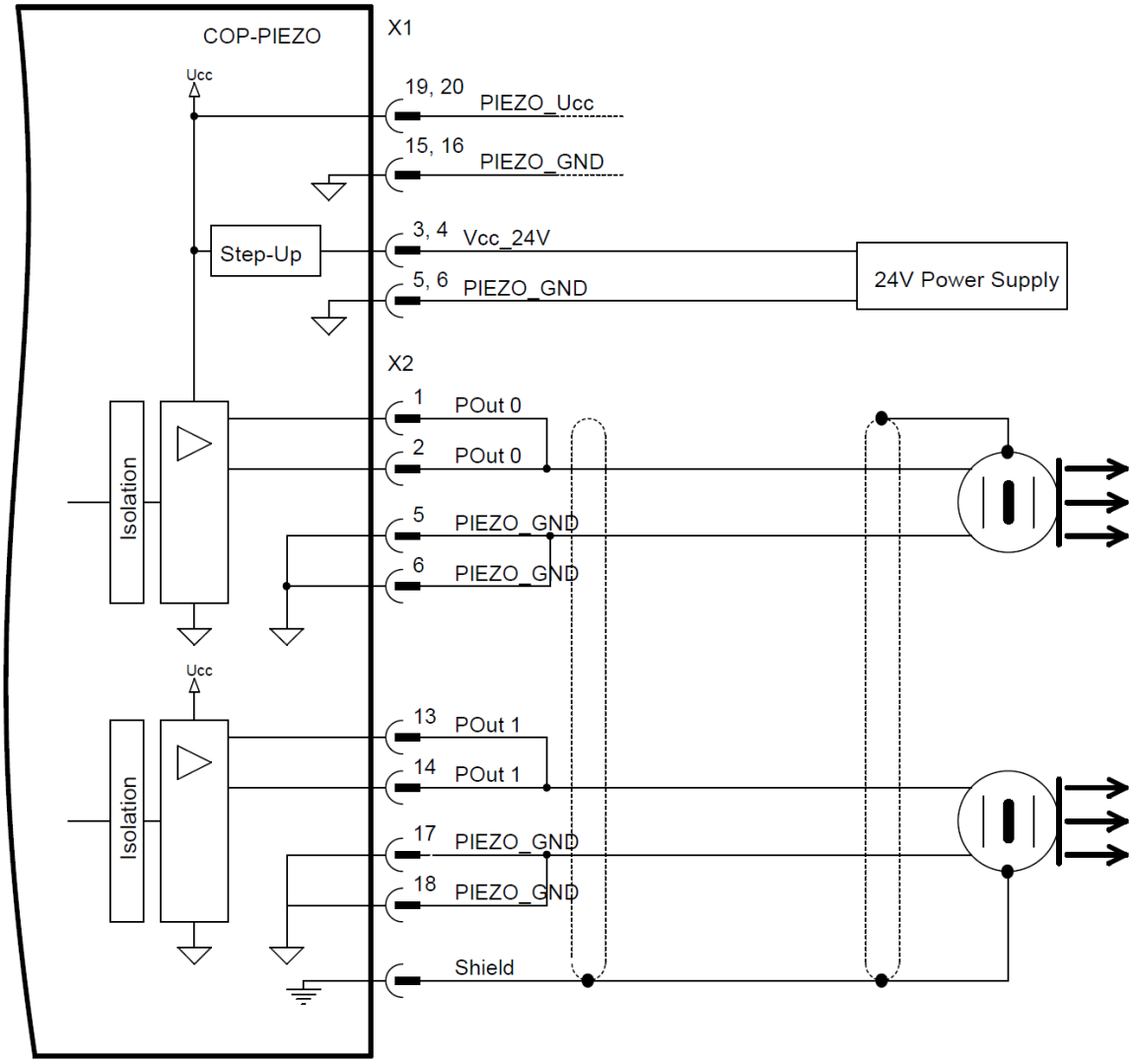

24.5. Available Options

Item Number	Label	Option	Description
611346900	COP-PIEZO		2 x Piezo output stages, up to max 150V, 5W in total

25. COP-SIO (Serial IO Interfaces)

COP-SIO 611246100

The COP-SIO module enables to integrate up to four SIO interfaces into the Indel system. You can use the software to configure the level of each interface as RS232 or RS422/RS485. For instance, this module allows for operator panels, cameras, sensors and other foreign equipment to be integrated into the Indel system.

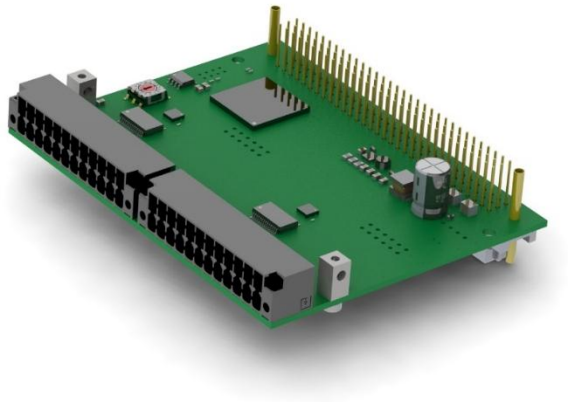

25.1. Technical Specifications

SIO		
Number of interfaces	4	
RS232		
Baud rate	Up to 115,200	
Data bits	7, 8	
Stop bits	1, 2	
Parity bits	Even, odd, none	
Hardware handshake	DSR, DTR	
Maximum cable length	2	m
RS422/RS485		
Baud rate	Up to 115,200	
Data bits	7, 8	
Stop bits	1, 2	
Parity bits	Even, odd, none	
Hardware handshake	None	
Maximum cable length	1200	m
Module		
Maximum power consumption at 24V node power supply	200	mA

25.2. Pin Assignment

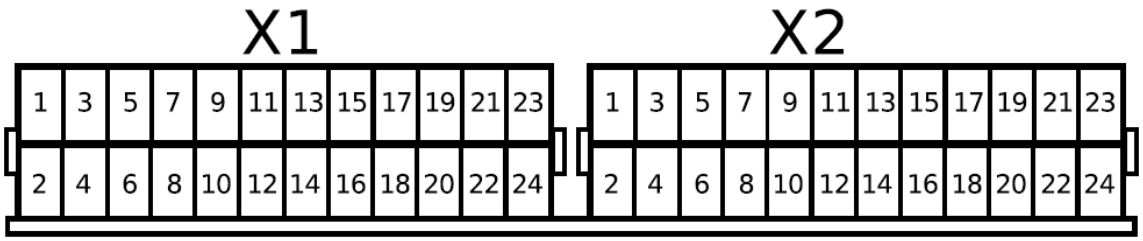

X1					
No.	Dir	Id.	Id.	Dir	No.
2	Out	SIO1 DTR	SIO0 DTR	Out	1
4	Out	SIO1 Tx	SIO0 Tx	Out	3
6	In	SIO1 Rx	SIO0 Rx	In	5
8	In	SIO DSR	SIO0 DSR	In	7
10		GND	GND		9
12	Out	+5V	+5V	Out	11
14		Shield	Shield		13
16					15
18					17
20					19
22					21
24		Shield	Shield		23

X2					
No.	Dir	Id.	Id.	Dir	No.
2	Out	SIO3 DTR	SIO2 DTR	Out	1
4	Out	SIO3 Tx	SIO2 Tx	Out	3
6	In	SIO3 Rx	SIO2 Rx	In	5
8	In	SIO3 DSR	SIO2 DSR	In	7
10		GND	GND		9
12	Out	+5V	+5V	Out	11
14		Shield	Shield		13
16					15
18					17
20					19
22					21
24		Shield	Shield		23

25.3. Connection Examples

RS232

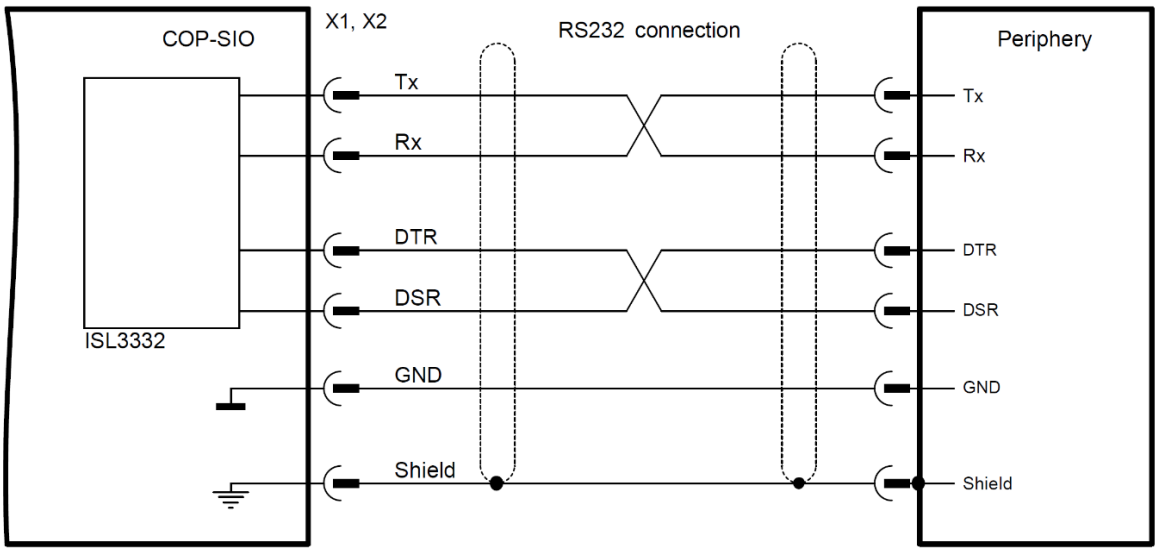

RS422

For a RS422 connection, an additional external 120Ω braking resistor must be placed at the receiver.

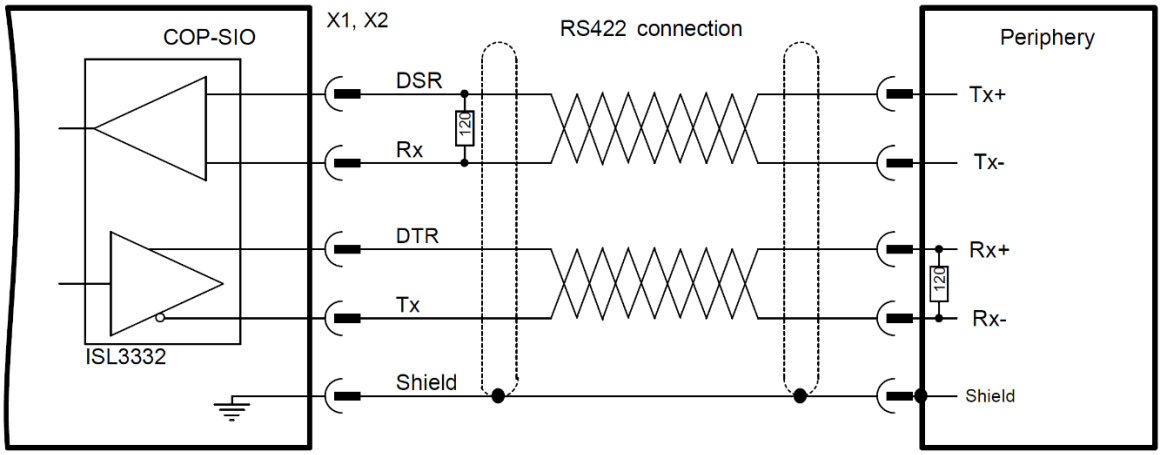

25.4. Available Options

Item Number	Label	Option	Description
611246100	COP-SIO		4 x serial IOs, RS232, RS422, 2400...115’200bauds

26. COP-LVDS (Low Voltage Differential Signaling Interface)

COP-LVDS 611144500

The COP-LVDS module has been developed specially developed for the integration of Lightning II Servo Drivers via the GS bus from Cambridge Technology. The GS bus is a serial bus protocol and runs over a 40-pin flat-ribbon cable (M-LVDS).
8 channels of 32 bits with a clock frequency of 24MHz are transmitted. This results in a sampling rate of 93.75kHz per axis.

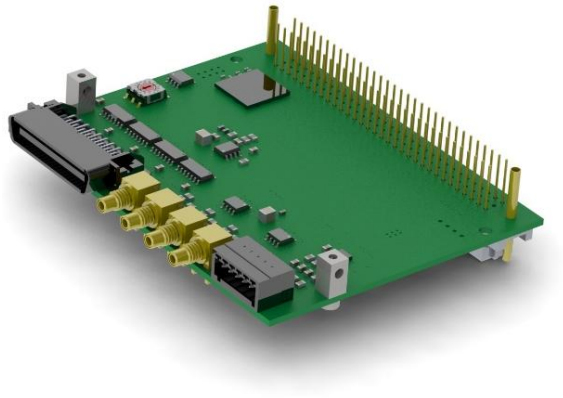

26.1. Technical Specifications

LVDS		
Number of interfaces	1	
Data rate	24	MHz
Data bits	32	Bit
Channels	8	
Sampling rate	93.75	kHz
Maximum cable length	2	m
Modul		
Maximum power consumption at 24V node power supply	200	mA

26.2. Pin Assignment

X1					
Nr	Dir	Bez	Bez	Dir	Nr
1		GND	GND		21
2		+CMD_Clk	-CMD_Clk		22
3		GND	GND		23
4		+CMD_FS	-CMD_FS		24
5		GND	GND		25
6		+CMD_D	-CMD_D		26
7		GND	GND		27
8		+Clk_En	-Clk_En		28
9		GND	GND		29
10					30
11					31
12		GND	GND		32
13		+COM	-COM		33
14		GND	GND		34
15		+Stat_D	-Stat_D		35
16		GND	GND		36
17		+Stat_FS	-Stat_FS		37
18		GND	GND		38
19		+Stat_Clk	-Stat_Clk		39
20		GND	GND		40

X2		
Nr	Dir	Bez
1		+5V
2		Inp-0
3		Inp-1
4		Inp-2
5		Inp-3
6		GND

26.3. Available Options

Item Number	Label	Option	Description
611144500	COP-LVDS		LVDS Interface Sampling rate: 93.75kHz

27. COP-HIL (Hilscher Module)

COP-HIL 611143100

The COP-HIL module enables to integrate various Hilscher modules into the Indel system. The COP platform can thus be furnished with various fieldbus systems.

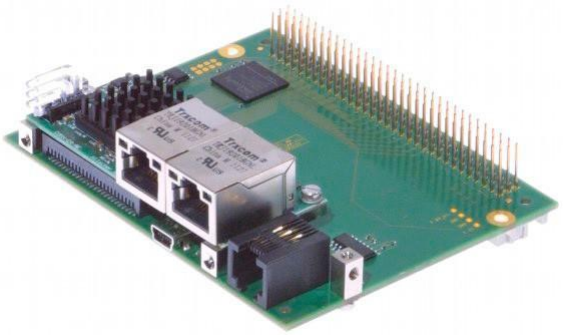

27.1. Technical Specifications

Interfaces	
Number of slots for Hilscher COM-X modules	1
Supported fieldbus systems	• Master Sercos III • Slave Sercos III • Master EtherCat • Slave EtherCat • Master Profinet I/O • Slave Profinet I/O • Slave CC Link • Master Profibus DP • Slave Profibus DP • Master CANopen • Slave CANopen • Master DeviceNet • Slave DeviceNet • Master EtherNet/IP • Slave EtherNet/IP
Debug interface	Serial, USB
Module	
Maximum power consumption at 24V node power supply	Depending on the Hilscher module used

Remarks:

- The COP-HIL can only be operated with an active master COP-MAS/COP-MAS2. In addition, the module must be placed next to the master.
- Due to extra Hilscher modules, the module requires two COP slots.
- Only one COP-HIL per COP node can be used.
- The Hilscher module is not included in the scope of delivery.

27.2. Pin Assignment

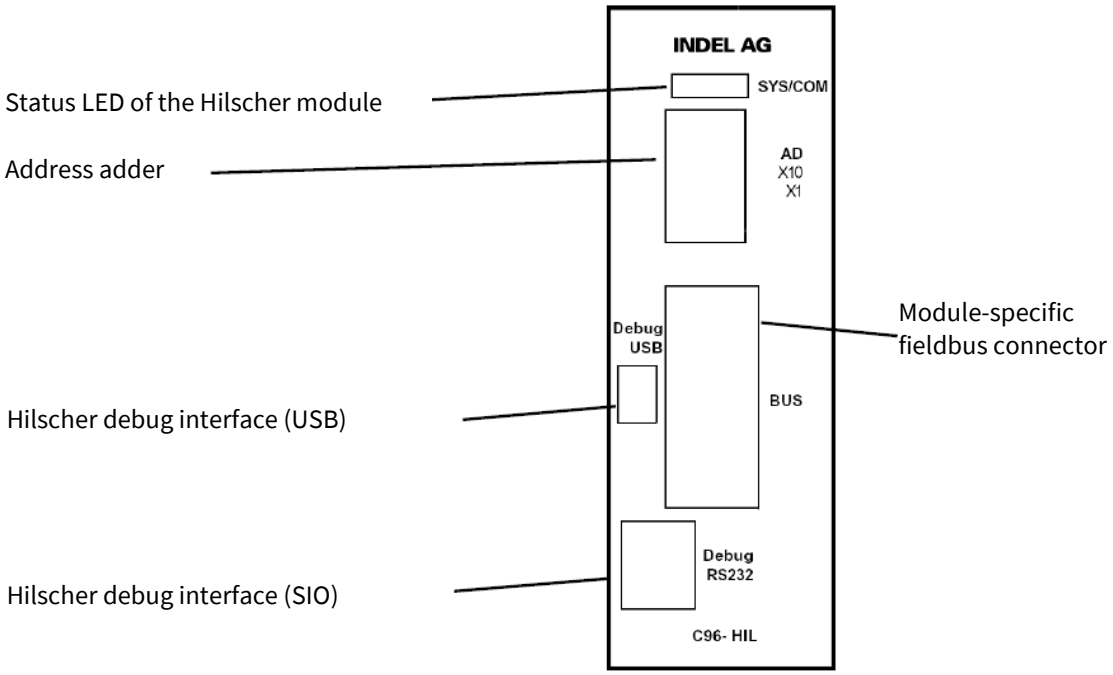

27.3. Available Options

Item Number	Label	Option	Description
611143100	COP-HIL		Carrier board for Hilscher modules of the COM-X and COM-C series

28. COP-LCR (Measuring Bridge for L, C and R)

COP-LCR 611246300

The COP-LCR is a measuring bridge for accurate Inductivity (L), Capacity (C) and Resistance (R) measurements. For the measurements, you can choose between serial or parallel spare circuit. The measuring voltage can be ± 2VRMS. In addition, an overlapping bias offset of ± 10V can be used for measuring the voltage.
Apart from the L, C and R measurements, the DC voltage can also be used to measure a diode.

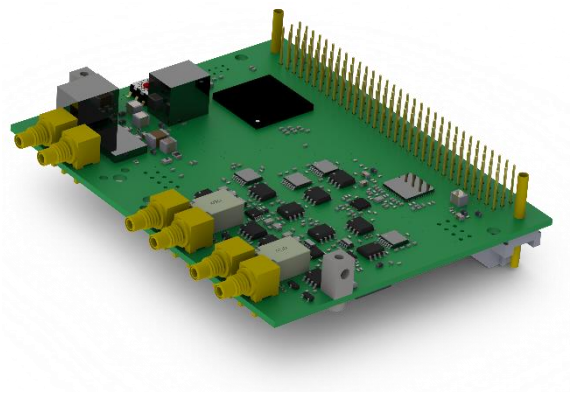

28.1. Technical Specifications

LCR Measuring Connectors		
Number of measuring inputs	1	
Measuring frequencies	0 to 1,000,000	Hz
Measuring voltages	± 2	V_{RMS}
Bias offset voltages	± 10	V_{DC}
Input impedance (HP-HC and LP-LC)	1	GΩ
Sampling rate	25	MHz
Measuring Accuracy[1)]		
Resistance: ranging from 1Ω to 10Ω (Rs_Q)	0.5	%
Resistance: ranging from 10Ω to 1kΩ (Rs_Q)	0.1	%
Resistance: ranging from 1kΩ to 1MΩ (Rp_Q)	0.3	%
Resistance: ranging from 1MΩ to 10MΩ (Rp_Q)	0.8	%
Capacity: ranging from 100pF to 1nF (Cp_D)	1.0	%
Capacity: ranging from 1nF to 100nF (Cp_D)	0.3	%
Capacity: ranging from 100nF to 10uF (Cs_D)	0.2	%
Capacity: ranging from 10uF to 1mF (Cs_D, 100Hz)	0.8	%
Inductance: ranging from 1uH to 10uH (Ls_Q)	5.0	%
Inductance: ranging from 10uH to 10mH (Ls_Q)	1.0	%
Inductance: ranging from 10mH to 5H (Lp_Q)	1.0	%

1) The measuring accuracy is specified as a relative error against the Hameg LCR Bridge (HM8118).

Temperature Behaviour[2]				
	0°C	20°C	40°C	Δ
Resistance: 1Ω	0.4	0.1	0.1	%
Resistance: 100kΩ	0.2	0.15	0.2	%
Capacity: 100nF	0.8	0.4	0.15	%
Capacity: 10uF	0.3	0.15	0.01	%
Inductance: 3uH	6.0	0.7	2.0	%
Inductance: 5H	0.4	0.2	0.15	%

Drift Behaviour[3]			
Resistance: 1Ω	Time up to 1‰ of drift	14	h
	Noise	0.1	%
Resistance: 100kΩ	Time up to 1‰ of drift	>48	h
	Noise	0.025	%
Capacity: 100nF	Time up to 1‰ of drift	>48	h
	Noise	0.014	%
Capacity: 10uF	Time up to 1‰ of drift	42	h
	Noise	0.015	%
Inductance: 3uH	Time up to 1‰ of drift	22	h
	Noise	1.2	%
Inductance: 5H	Time up to 1‰ of drift	17	h
	Noise	0.015	%

Module		
Maximum power consumption at 24V node power supply[4]	1.0	A

2) The temperature difference is specified as a relative difference between three various COP-LCR nodes.
3) The drift behaviour is specified via time until 1‰ of the value is changed and via relative difference in case of noise.
4) The maximum power consumption is highly dependant on the connected DUT.

28.2. Notes on the Use

- The COP-LCR needs to be calibrated after the operating temperature is reached (15min after power on).
  - Calibration should be done every twelve hours.
  - Calibration is absolutely required after rebooting or when changes are made to the measurement setup. Replacement of measuring probes or cables or rearrangement of the measuring setup are deemed to be a change.
- Maintain a constant ambient temperature.
  - If possible, maintain the ambient temperature constantly at 20°C.
- To ensure high accuracy of measurements, synchronise the COP-LCR with reference components.

28.3. Maintenance and Calibration

To ensure the correctness of readings, it is recommended calibrating the COP-LCR once a year. To do that, please return your equipment to Indel AG.

28.4. Pin Assignment

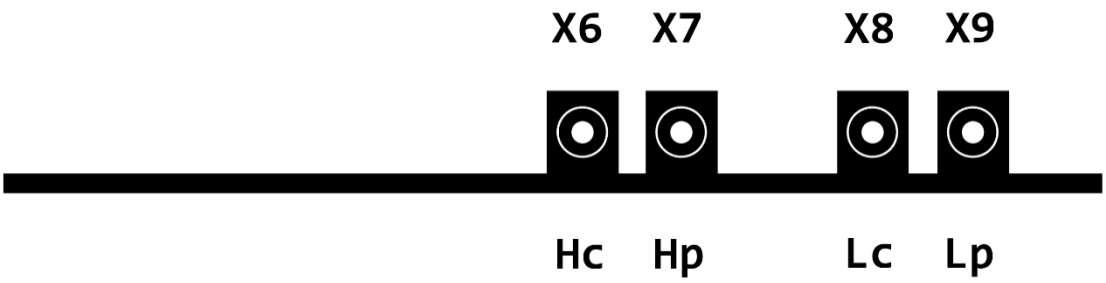

- Hc: High current
- Hp: High potential
- Lc: Low current
- Lp: Low potential

28.5. Available Options

Item Number	Label	Option	Description
611246300	COP-LCR		1 x measuring input for L, C, R and a diode

29. COP-IT (Thermocouple/Pulsator/PWM/LVDT)

COP-IT 611144600

The COP-IT is a universal module which enables to operate and measure thermocouple elements, measuring bridges and LVDT sensors. At the PWM outputs LEDs can be controlled via PWM modulation to generate flashlights. The high-resolution pulsators are used, for example, for actuate dispensers.

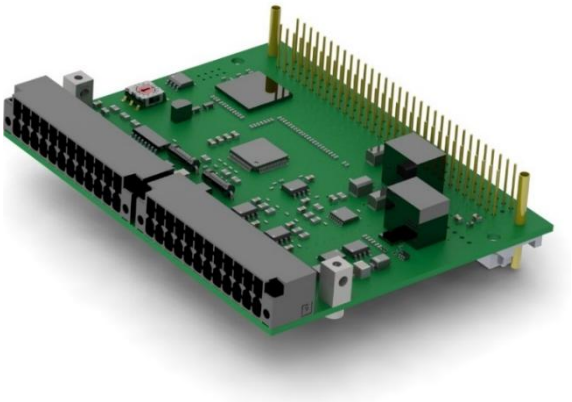

29.1. Technical Specifications

Pulsators		
Number of outputs	2	
Pulsator specifications	See section 18.3	
Maximum output current at 24V outputs [1) 2)]	50	mA
ROUT output resistance	6.875	Ω
PWM		
Number of outputs	6	
IMAX output current per output	2.5	A
PWM frequency	20	kHz
Resolution	16	Bit
Protection	Internal current limitation, excessive temperature	
Type	Open drain output	
LVDT Sensors		
Number	2	
Supported LVDT types	Mahr	
Measuring range	± 0.01, ± 0.1, ± 1, ± 10	V
Measuring Bridge		
Bridge voltage	4.5	V
Number of measuring inputs	2	
Measuring range	± 0.01, ± 0.1, ± 1, ± 10	V
Resolution	16	Bit
Drift	50	ppm/K

Thermocouple Inputs		
Number of inputs	4	
Temperature adjustment	Internally or via PT100 sensor on the COP connector	
Voltage ranges	± 0.025, ± 0.25, ± 2.5	V
Configurable software filter	100	ms
Trigger Input		
Number of inputs	1	
Rated voltage	5	V_{DC}
Negative-going switching threshold	< 1	V_{DC}
Positive-going switching threshold	> 3	V_{DC}
Module		
Warm-up time	15	min
Maximum power consumption at 24V node power supply	300	mA

1) If no external Vcc PULS supply unit is connected, the PULS outputs are supplied with internal 5V power.
2) The PULS outputs are not short-circuit safe.

29.2. Pin Assignment

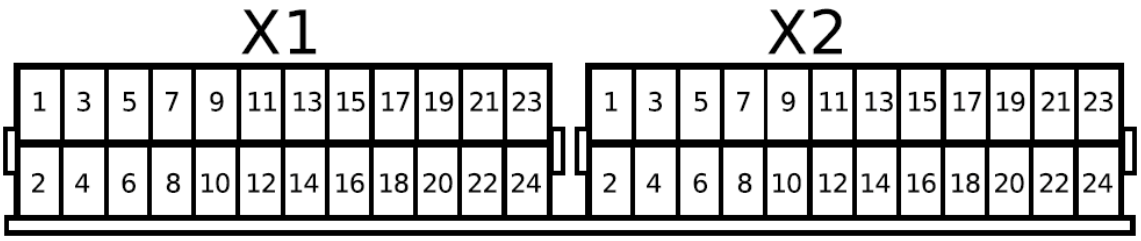

X1					
No.	Dir	Id.	Id.	Dir	No.
2	In	-PT100	+PT100	In	1
4		Shield	Shield		3
6	In	+TC 0	+TC 1	In	5
8	In	-TC 0	-TC 1	In	7
10		Shield	Shield		9
12	In	+TC 2	+TC 3	In	11
14	In	-TC 2	-TC 3	In	13
16	Out	-Vcc_MB0	-Vcc_MB1	Out	15
18	In	-MB 0	-MB 1	In	17
20	In	+MB 0	+MB 1	In	19
22	Out	+Vcc_MB0	+Vcc_MB1	Out	21
24		Shield	Shield		23

X2					
No.	Dir	Id.	Id.	Dir	No.
2	Out	-Vcc_LVDT0	-Vcc_LVDT1	Out	1
4	In	-LVDT 0	-LVDT 1	In	3
6	In	+LVDT 0	+LVDT 1	In	5
8	Out	+Vcc_LVDT0	+Vcc_LVDT1	Out	7
10		Shield	Shield		9
12	Out	PWM 0	+PULS_Ucc	In	11
14	Out	PWM 1	PULS 0	Out	13
16	Out	PWM 2	PULS 1	Out	15
18	Out	PWM 3	-PULS_Ucc	In	17
20	Out	PWM 4	GND	In	19
22	Out	PWM 5	Trigger	In	21
24		Shield	Shield		23

29.3. Hardware Description

PWM outputs

The PWM outputs can be controlled as DAC via software. Normally they are operated with 20kHz. However, the common frequency can also be adjusted.

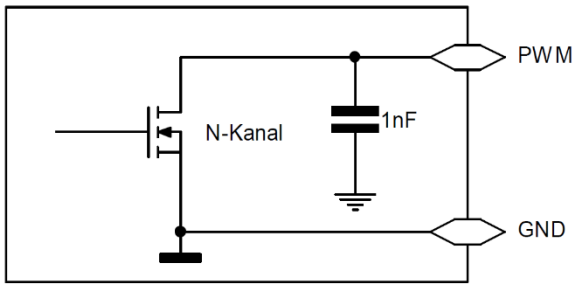

Pulse outputs

The two pulse outputs can be powered with 5...24V. Outputs PULS 0 and 1 are supplied from the Vcc PULS power unit. If no Vcc PULS power unit is connected, the outputs are supplied with internal 5V power. The wires of the pulse outputs must be shielded.
The shield should be applied to the mounting plate before the COP module using a fully contacting strap. Make sure that there is a good connection between the module's GND terminals and the earthing conductor of the 24V or Vcc PULS power supply.

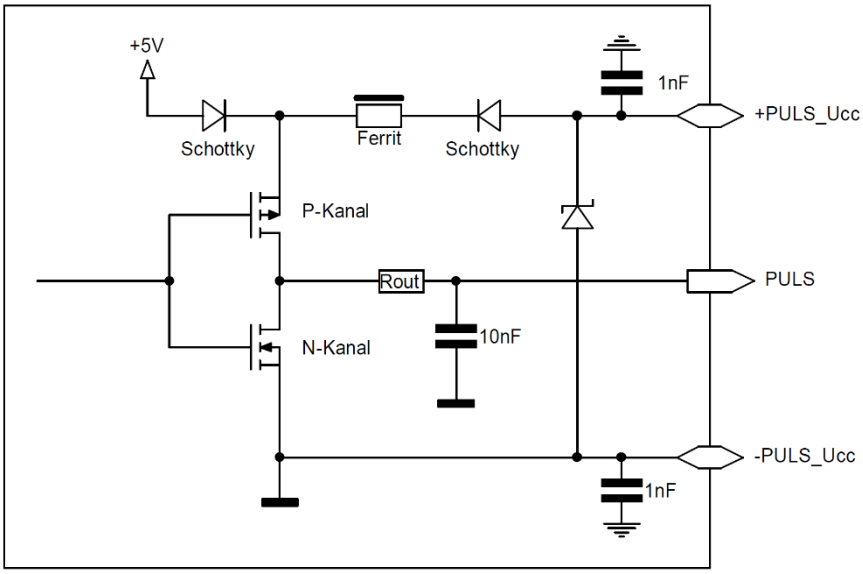

Thermocouple inputs

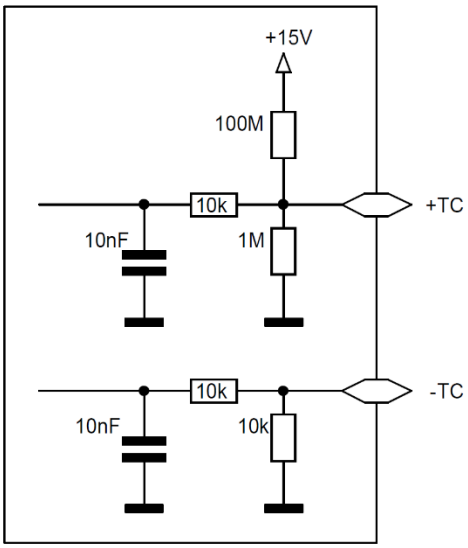

29.4. Connection Examples

Measuring bridge

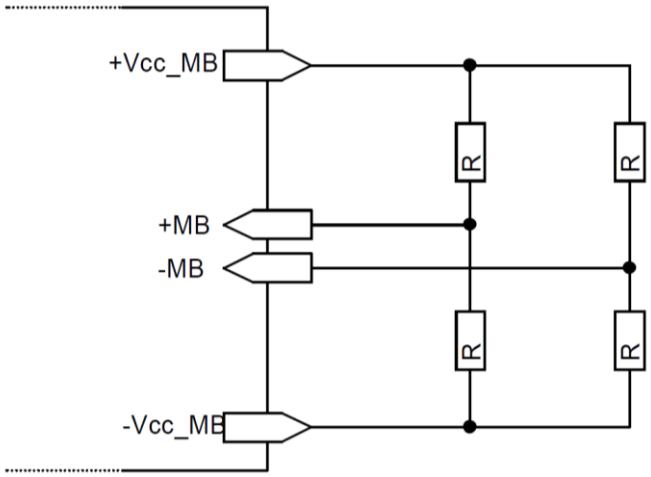

LVDT sensors

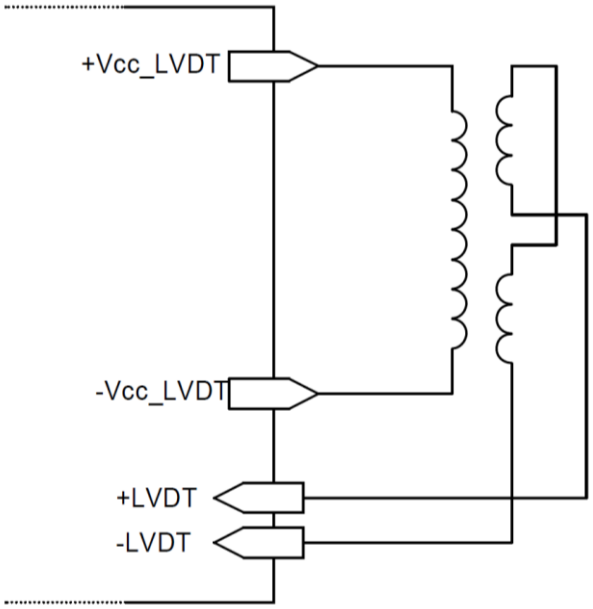

PWM output LED
Single line

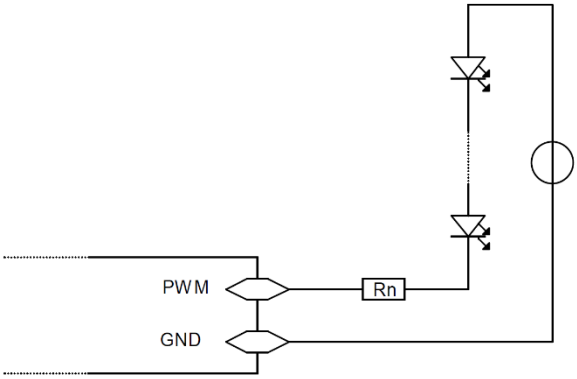

PWM output LED
Dual line

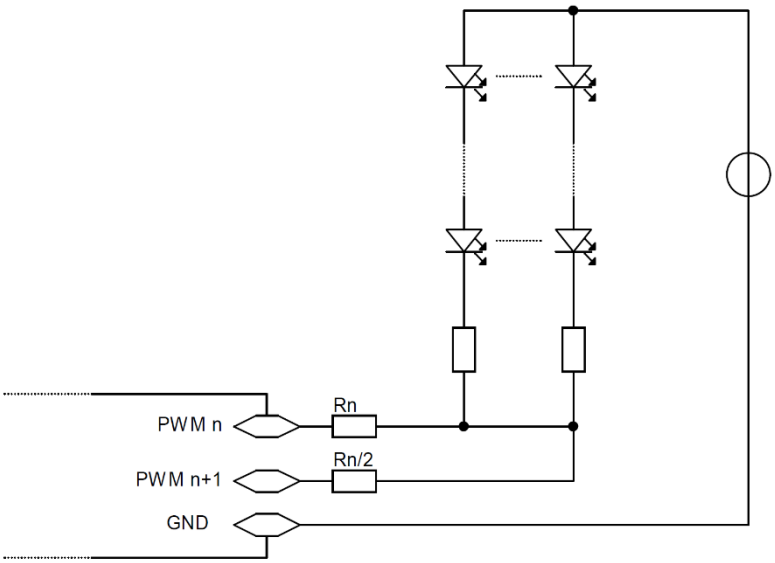

29.5. Available Options

Item Number	Label	Option	Description
611144600	COP-IT		• 4 thermocouple elements with offset measurement • 2 LVDT sensors • 2 pulse outputs with 1us resolution • 6 PWM (LED)

30. COP-VC8 (Directional Valve Control)

COP-VC8 612057800

The COP-VC8 module is ideally suited for controlling electromagnetic directional control valves. 8 valves can be controlled per COP-VC8. The pulse generator operates with a resolution of one microsecond. Frequency, pulse length, number of pulses as well as switching and holding current are configurable.

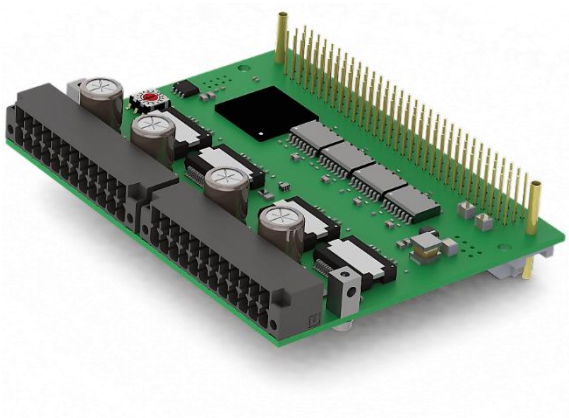

30.1. Technical Specifications

Valve Control		
Number of interfaces	8	
Power supply	24	V_{DC}
Max. Continuous current per output	1	A
Max. Switching current I_{Max}	4	A
Protection	Short-circuit, excessive temperature	
Module		
Maximum power consumption at 24V node power supply	200	mA

30.2. Pin Assignment

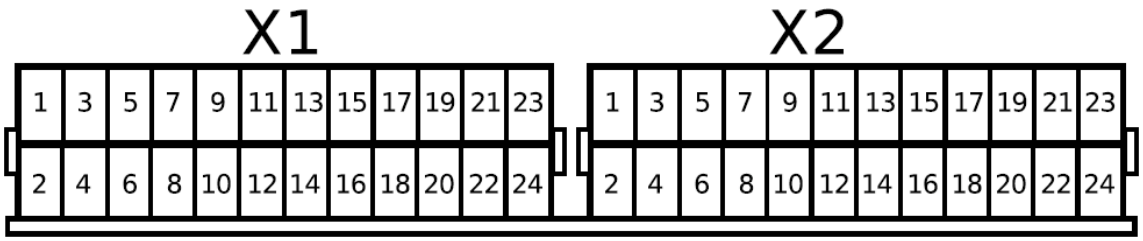

X1					
Nr	Dir	Bez	Bez	Dir	Nr
2	In	Ucc	Ucc	In	1
4	In	Ucc	Ucc	In	3
6		GND	GND		5
8		GND	GND		7
10		Shield	-Out0	Out	9
12		Shield	+Out0	Out	11
14		Shield	-Out1	Out	13
16		Shield	+Out1	Out	15
18		Shield	-Out2	Out	17
20		Shield	+Out2	Out	19
22		Shield	-Out3	Out	21
24		Shield	+Out3	Out	23

X2					
Nr	Dir	Bez	Bez	Dir	Nr
2	In	Ucc	Ucc	In	1
4	In	Ucc	Ucc	In	3
6		GND	GND		5
8		GND	GND		7
10		Shield	-Out4	Out	9
12		Shield	+Out4	Out	11
14		Shield	-Out5	Out	13
16		Shield	+Out5	Out	15
18		Shield	-Out6	Out	17
20		Shield	+Out6	Out	19
22		Shield	-Out7	Out	21
24		Shield	+Out7	Out	23

30.3. Valve Output Specification

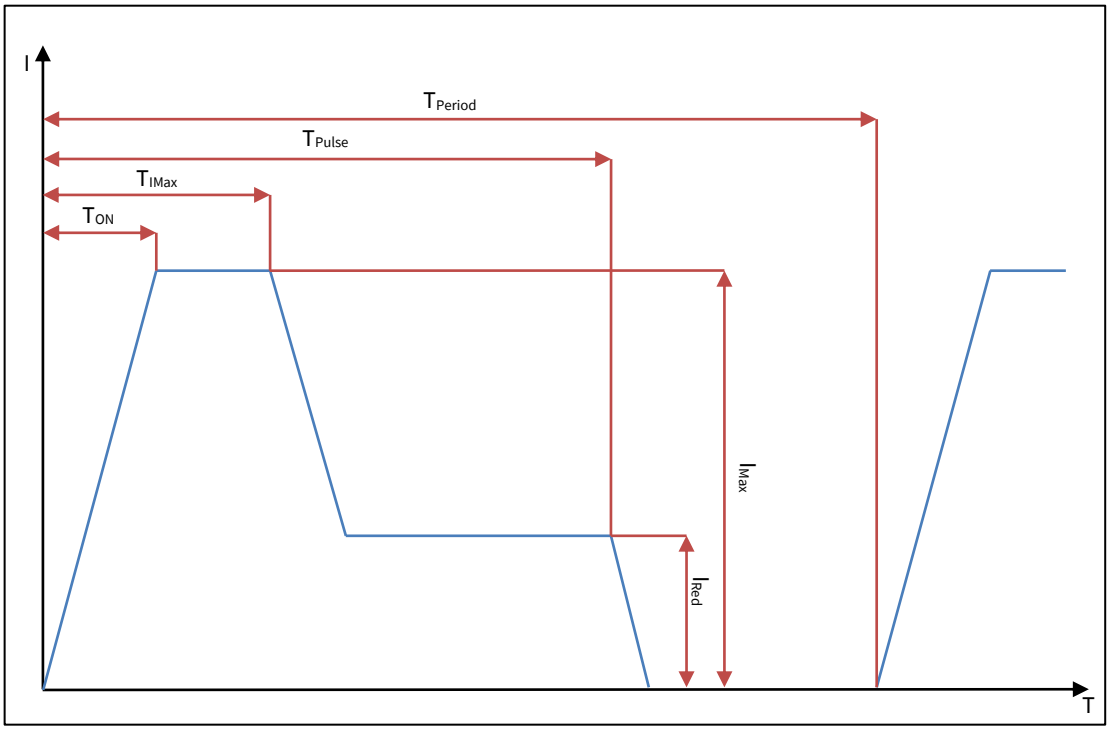

	Resolution	Min	Max	Unit
T_{IMax}	1	0	4095	µs
I_{Max}	1/256	0	4	A
I_{Red}	1/256	0	4	A
T_{Pulse}	1	0	1048574	µs
T_{Period}	1	0	1048575	µs

30.4. Available Options

Item Number	Label	Option	Description
612057800	COP-VC8		Valve control for 8 valves. Pulse generator with 1us resolution with frequency, pulse length and number of pulses. Configurable valves and control parameters for switching and holding current.

31. COPx-AX4 (Motor Output Stage for 4 Axes)

COPx-AX4 611653900

COPx is a COP card in a larger format with dimension 150 x 80mm. This module was specially developed for applications directly on a machine head periphery. Currently only permanent magnet synchronous motors (BLDC or EC) are supported. Only incremental encoders can be used as feedback system. In addition, an integrated braking resistor is available.

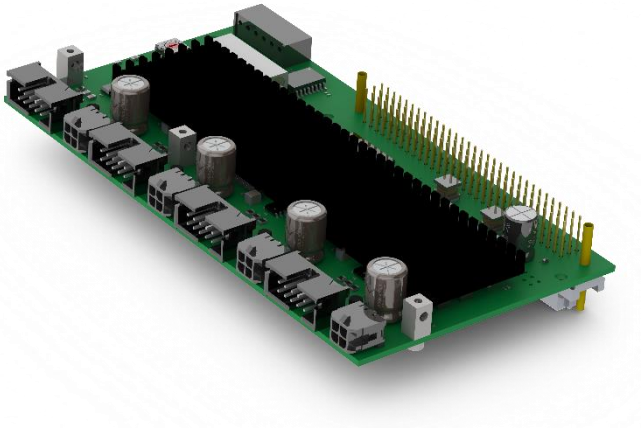

For the motor control, a COP-MAS or COP-MAS2 module with a free processor core is needed in the same COP case. Only a maximum of three COPx-AX4 modules can be used per COP node.

If a COP node contains COPx-AX4 modules, they must start with the rotary switch address 0. Further COPx-AX4 modules follow with increasing addressing. This means when using one module the address is set to 0. When using three modules, the addresses are set to 0, 1and 2. All other COPx/COP module types begin at address 3 and following.

If an external motor brake is additionally connected or if the motor has Hall sensors, a COPx-ADIO or COP-IO module is required in the same COP node. Hall sensors must be connected to the ascending numbered digital inputs. For example: Hall 1 at DIN 1, Hall 2 at DIN 2 and Hall 3 at DIN 3.

31.1. Technical Specifications

Motor Output Stage		
Number of output stages	4	
Integrated braking resistor	56Ω/5W	
Minimum intermediate circuit voltage	24	V_{DC}
Rated intermediate circuit voltage	48	V_{DC}
Maximum intermediate circuit voltage	56	V_{DC}
Continuous current per final stage	2.5	A_{RMS}
Peak current (Max 5s) per final stage	5	A_{RMS}
Protection	Excessive temperature and over-current	
Connector	Molex 43045-0400	

Motor		
Minimum inductance	1	mH
Minimum resistance	0.2	Ω
Maximum cable length	20	m
Motor cable	Shielded	
Types of motor	Three-phase synchronous motors with permanent magnet DC motors	
Incremental Encoder Interface		
Level	RS422	
Input impedance	2.2	kΩ
Maximum input frequency	2.5	MHz
Maximum current load at 5V output	200	mA
Power cable	Unshielded	
Connector	TE Low Pro HDR 10P	
Module		
Maximum power consumption at 24V node power supply	100	mA

31.2. Pin Assignment

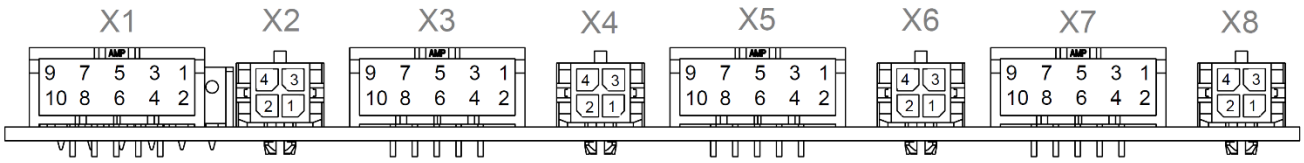

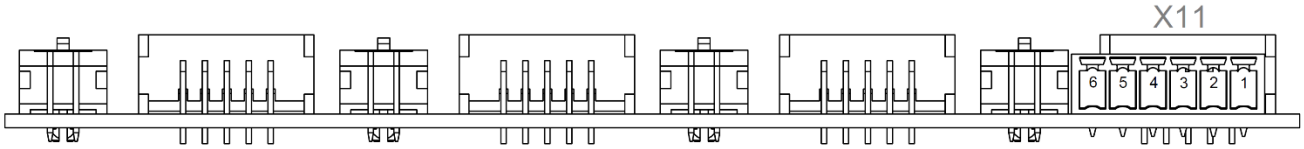

X1, X3, X5, X7					
No.	Dir	Id.	Id.	Dir	No.
2	Out	Enc_5V	NC		1
4		NC	GND		3
6	In	Inc A+	Inc A-	In	5
8	In	Inc B+	Inc B-	In	7
10	In	Ref+	Ref-	In	9

X2, X4, X6, X8					
No.	Dir	Id.	Id.	Dir	No.
2	Out	Mot V	Mot U	Out	1
4		Shield	Mot W	Out	3

X11		
No.	Dir	Id.
1		Earth
2		Earth
3		GND
4		GND
5	In	Mot_Ucc
6	In	Mot_Ucc

31.3. Connection Examples

Synchronous motor at a final stage

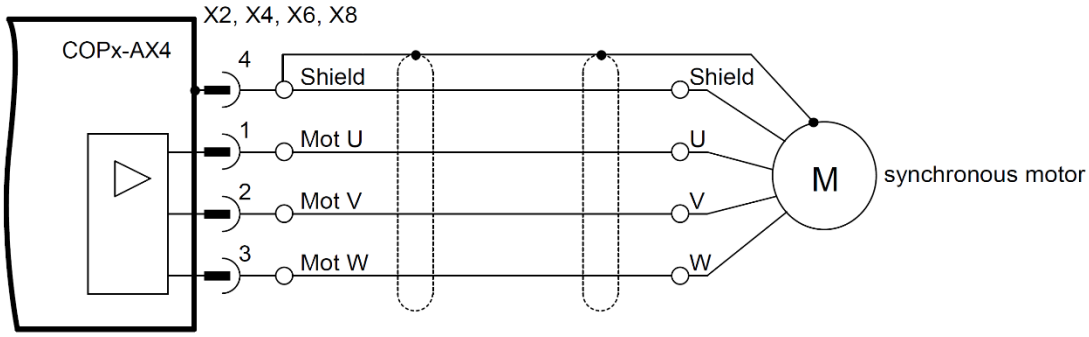

DC motor at a final stage

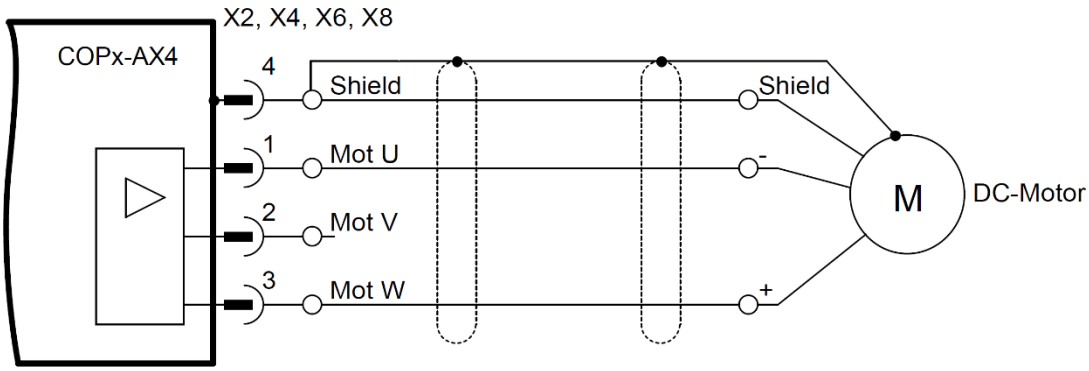

Synchronous motor at two parallel output stages

The Y cables must be at least 25cm long, otherwise the output stages may be destroyed.

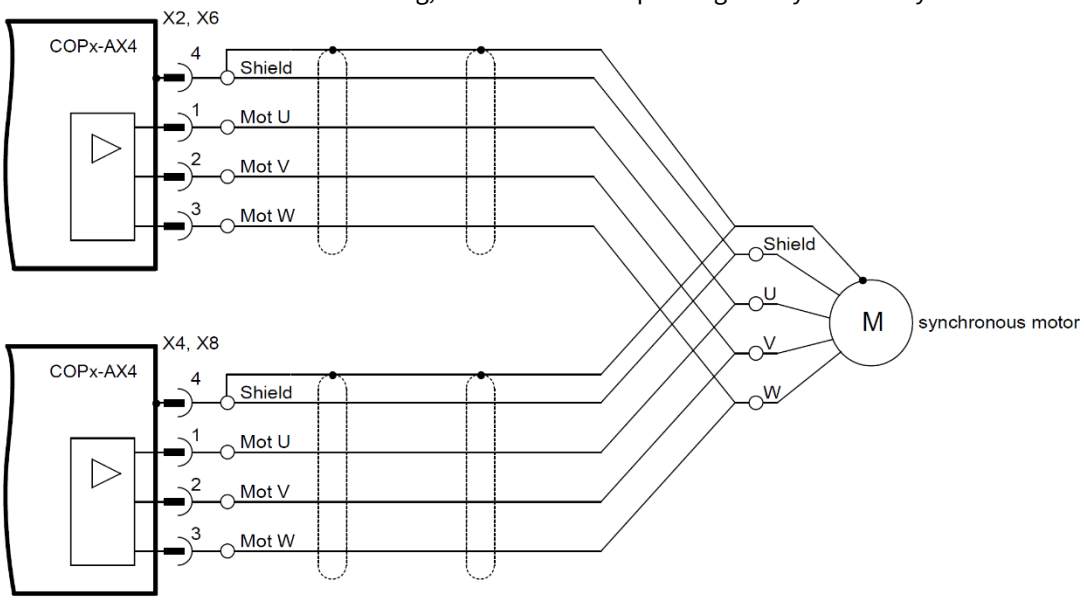

Incremental Encoder Feedback

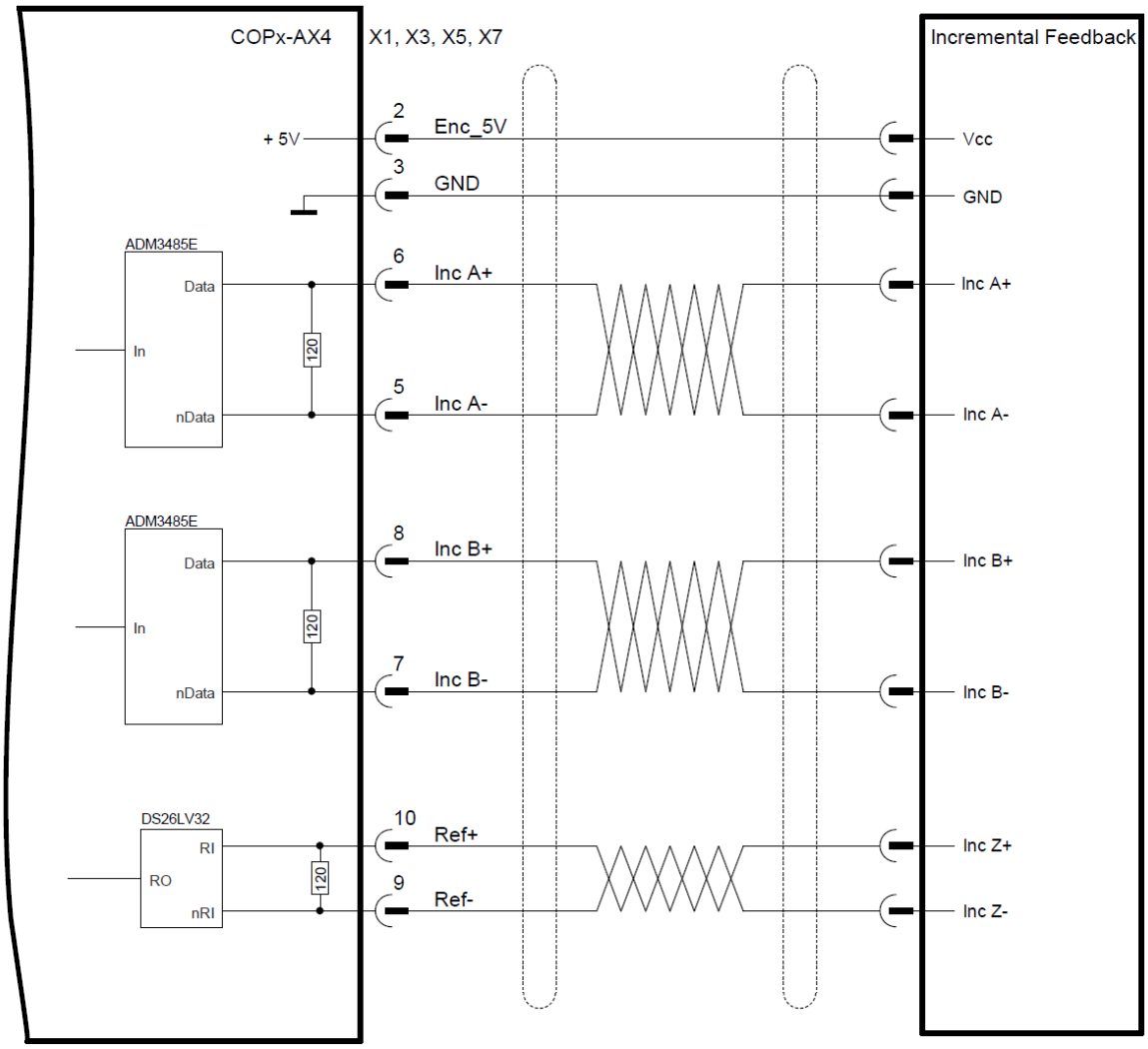

31.4. Available Options

Item Number	Label	Option	Description
611653900	COPx-AX4		• 4x Motor output stage, • PM, DC motors • Incremental Encoder Feedback

32. COPx-ADIO (Digital IO/PWM/PT100/Analogue Input/LVDT)

COPx-ADIO 611653800

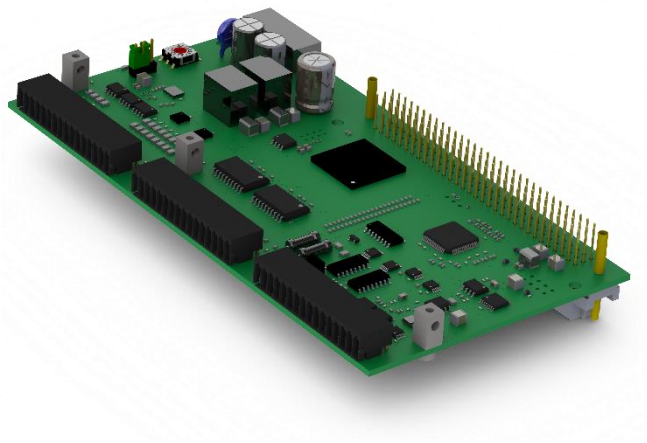

The COPx is a COP card in a larger format. Its dimensions are 150mmx80mm.
The COPx-ADIO module provides the user with eight digital inputs and sixteen digital outputs. In addition, it is possible to supply 24VDC to external peripherals.
The eight analogue inputs are processed as single-ended with a resolution of 16bit.
Two inputs for PT100 sensors are available for temperature measurements.
At the PWM outputs, LEDs can, among other things, also be controlled via PWM modulation. This can be used for flashlight generation. The high-resolution pulsators are used, for example, for actuating dispensers.
The control and analysis of LVDT sensors are also supported.

32.1. Technical Specifications

Digital Inputs		
Number of inputs	8	
Rated voltage	24+30%	V_{DC}
Switching threshold	$V_{IL} < 4.4$; $V_{IH} > 11.5$	V_{DC}
Input low-pass filter cut-off frequency	1.6	kHz
Input impedance	12	kΩ
Digital Outputs		
Number of outputs	16	
Maximum current per output	1	A
Maximum current per output when every second output is loaded	2	A
Protection	Short-circuit proof	

Analogue Inputs		
Number of slow inputs	4	
Number of fast inputs	4	
Technology	Single-ended	
Sampling rate of slow inputs	2	kHz
Sampling rate of fast inputs	16	kHz
Voltage range	± 0.1, ± 1, ± 10, ± 5 (relative to analogue GND)	V
Resolution	16	Bit
Input impedance	1	MΩ
Hardware Filter (TP)	1.6	kHz
Full scale drift	20	ppm/K
Common mode	± 10	V
Pulsators		
Number of outputs	2	
Pulsator specifications	See section 18.3	
Maximum output current of 24V outputs [1) 2)]	500	mA
Rout output resistance	6.875	Ω
PWM		
Number of outputs	3	
IMAX output current per output	2.5	A
PWM frequency	20	kHz
Resolution	10	Bit
Protection	Internal current limitation, excessive temperature	
Type	Open drain output	
LVDT Sensors		
Number	1	
Supported LVDT types	Mahr	
PT-100 Temperature Measurement		
Number PT-100 inputs	2	
Measuring range	-80 … 500	°C
Sampling rate	200	Hz
Resolution	0.02	K
Relative accuracy	0.5	K
Full Scale drift	10	ppm/K
Connection technology	Two-wire	

Module		
Warm-up time	15	Min
Maximum power consumption at 24V node power supply (connected COP-MAS2 and digital outputs without load!)	250	mA

1) Vcc of the pulsators can be changed from 24V to 5V using jumpers.
2) The pulse outputs are not short-circuit safe.

32.2. Pin Assignment

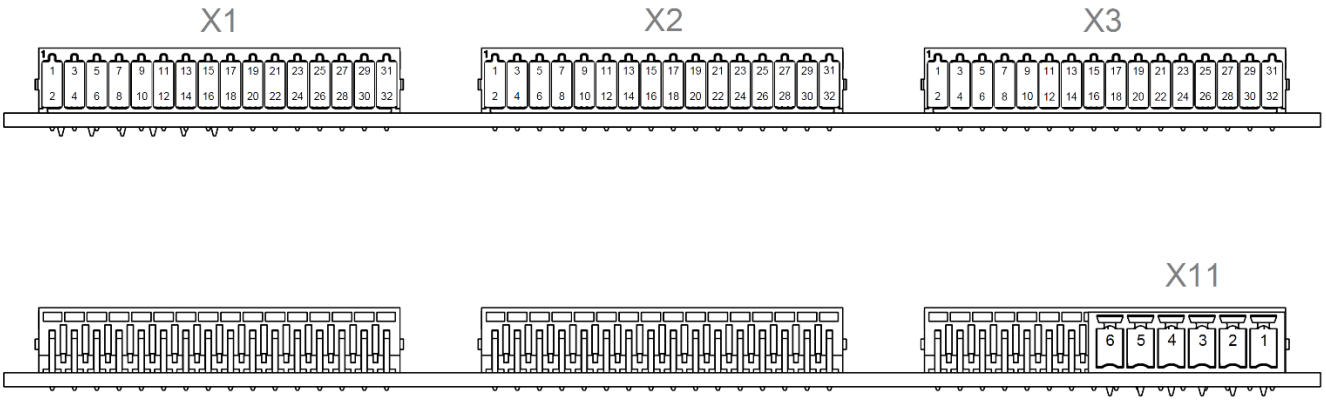

X1					
No.	Dir	Id.	Id.	Dir	No.
2		GND	PULS 0[3)]	Out	1
4		GND	PULS 1	Out	3
6		GND	Shield		5
8		GND	GND		7
10		GND	Shield		9
12	Out	+24V	PWM 0	Out	11
14	Out	+24V	PWM 1	Out	13
16	Out	+24V	PWM 2	Out	15
18	Out	+24V	D 00	In	17
20	Out	+24V	D 01	In	19
22	Out	+24V	D 02	In	21
24	Out	+24V	D 03	In	23
26	Out	+24V	D 04	In	25
28	Out	+24V	D 05	In	27
30	Out	+24V	D 06	In	29
32	Out	+24V	D 07	In	31

X2					
No.	Dir	Id.	Id.	Dir	No.
2		GND	D 00	Out	1
4		GND	D 01	Out	3
6		GND	D 02	Out	5
8		GND	D 03	Out	7
10		GND	D 04	Out	9
12		GND	D 05	Out	11
14		GND	D 06	Out	13
16		GND	D 07	Out	15
18		GND	D 08	Out	17
20		GND	D 09	Out	19
22		GND	D 10	Out	21
24		GND	D 11	Out	23
26		GND	D 12	Out	25
28		GND	D 13	Out	27
30		GND	D 14	Out	29
32		GND	D 15	Out	31

P3) PULS: Pulse outpu

3) PULS: Pulse output

X3					
No.	Dir	Id.	Id.	Dir	No.
2	I/O	PT100 1	PT100 0	I/O	1
4		AGND[4)]	AGND		3
6		Shield	Shield		5
8	Out	A 24V	A 24V	Out	7
10	Out	A 24V	A 24V	Out	9
12	In	A 01	A 00	In	11
14	In	A 03	A 02	In	13
16		AGND	AGND		15
18		AGND	AGND		17
20	In	A 05	A 04	In	19
22	In	A 07	A 06	In	21
24		AGND	AGND		23
26	Out	A 24V	A 24V	Out	25
28		Shield	Shield		27
30	In	- LVDT	-VCC_LVDT	Out	29
32	In	+ LVDT	+VCC_LVDT	Out	31

X11		
No.	Dir	Id.
1		Earth
2		GND
3		GND
4	In	VCC IO 1[5)]
5	In	VCC IO 0[5)]
6	In	VCC_24V

4) AGND: analogue ground
5) The digital outputs are supplied from two separate power sources. VCC IO 0 for D 00 to D 07; VCC IO 1 for D 08 to D 15.

32.3. Hardware Description

Pulsator (DPWM)
The pulse outputs can be set at 5V or 24V using jumpers. This cannot be changed during operation however.

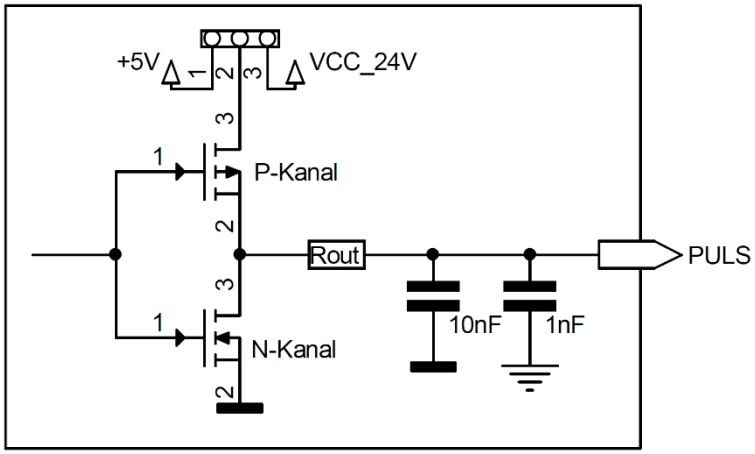

PWM

PWM signals are generated and changed via software.

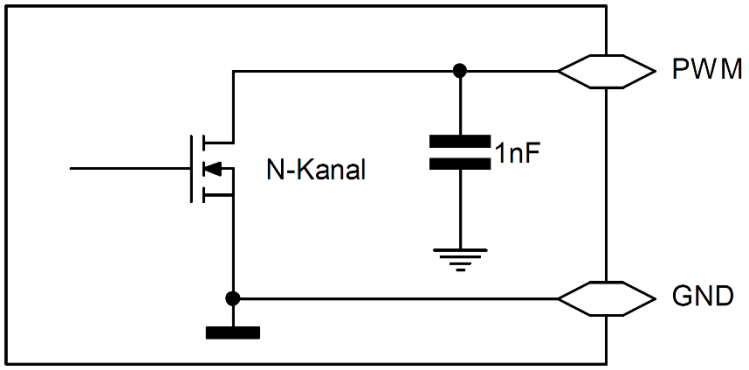

Digital inputs

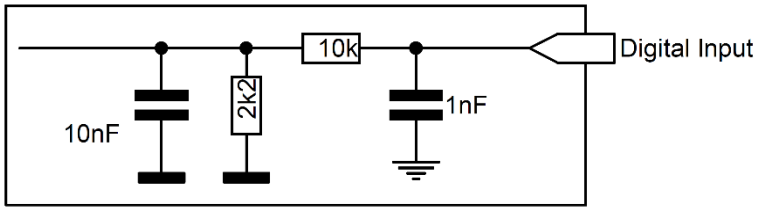

Digital outputs

The digital high side outputs are supplied via X11 connector. There are two different power sources.
VCC IO 0 supplies power to D 00 to D 07
VCC IO 1 supplies power to D 08 to D 15

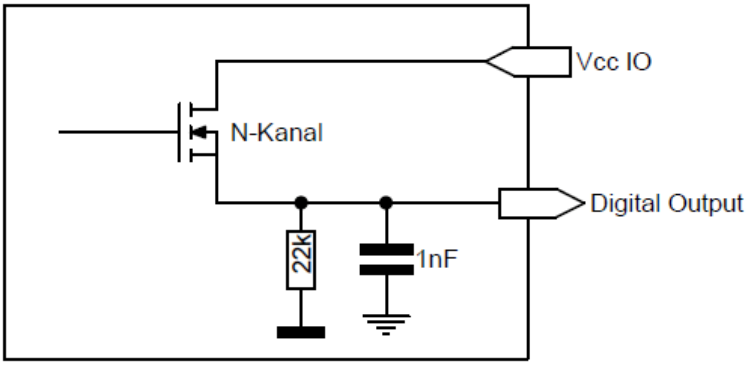

PT100

The PT100 sensors are connected via two-wire lines. To prevent errors due to self-heating, the measuring current flows only during the PT100 measurement. The PT100 terminal serves both as a power output and a measuring input. The PT100 is measured directly against analogue earth.

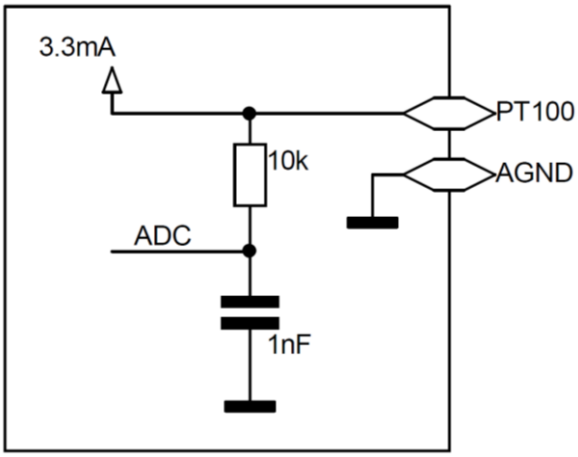

Analogue inputs

The analogue inputs are not differential. Thus, measurements are always carried out against analogue earth. The input range can be set from ± 5V to ± 10V.

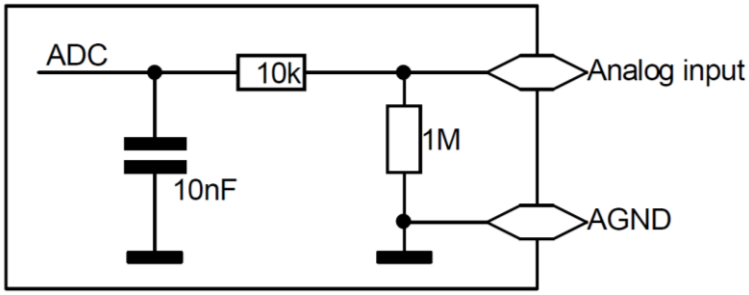

LVDT

The ± VCC LVDT is used to supply the reference signal. The measurement signal is recorded and analysed at the ± LVDT inputs.

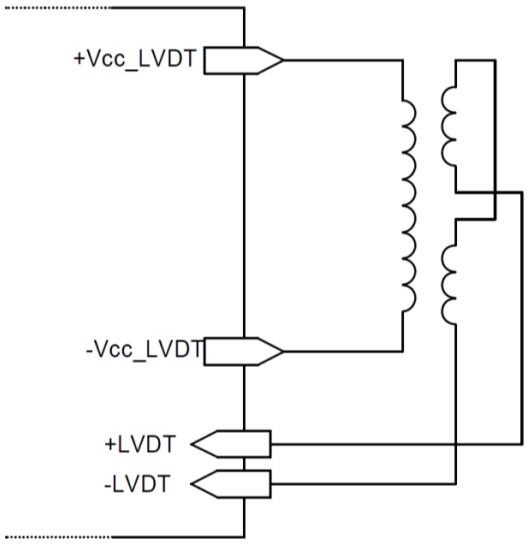

32.4. Available Options

Item Number	Label	Option	Description
611653800	COPx-ADIO		• 2 x pulse outputs with 1us resolution • 3 x PWM (LED) • 8 x digital inputs • 16 x digital outputs • 2 x PT100 • 8 x analogue inputs • 1 x LVDT

33. COP-Proto-S6 (Prototype Board)

COP-Proto-S6 611143700

The COP-Proto-S6 is a prototype board which, starting from the Spartan 6 FPGA employed, provides a total of 48 IOs. It enables the customer to develop and simply integrate its own specific interfaces into the Indel system. The IOs can be configured in the software as an input or output and operated up to 16kHz via COP bus.

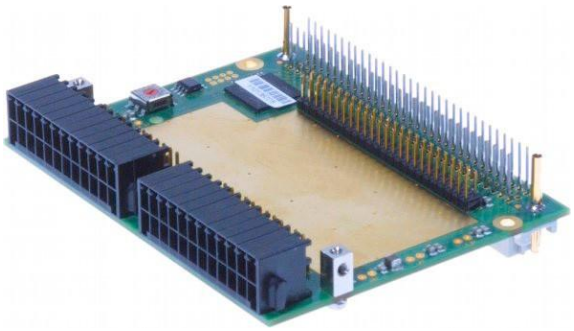

33.1. Technical Specifications

IOs		
Number IOs	48	
COP bus sampling rate	16	kHz
Outputs		
Technology	3.3V CMOS	
Maximum output low level	0.4	V
Maximum output high level	2.9	V
Maximum output current	15	mA
Capacity	10	pF
Pull-up	approx. 10	kΩ
Inputs		
Technology	3.3V CMOS	
Input voltage Vmin	-0.4	V
Input voltage Vmax	4.1	V
Low input threshold	< 0.8	V
High input threshold	> 2	V
Capacity	10	pF
Pull-up	Approx. 10	kΩ
Module		
Maximum power consumption at 24V node power supply	100	mA

33.2. Use and Warranty

The COP-Proto-S6 is delivered with pre-assembled pin strips. The customer must build its prototypes so that the module could be tested and repaired without any customer-specific peripherals having to be connected to it, for example, by using an add-on board. Any modules received in a state other than the delivery one has neither been tested nor repaired by Indel.

Since the FPGA can be destroyed when improperly handled, it is not covered by the warranty. In general, Indel recommends using appropriate drivers for the protection of FPGAs.

33.3. Pin Assignment

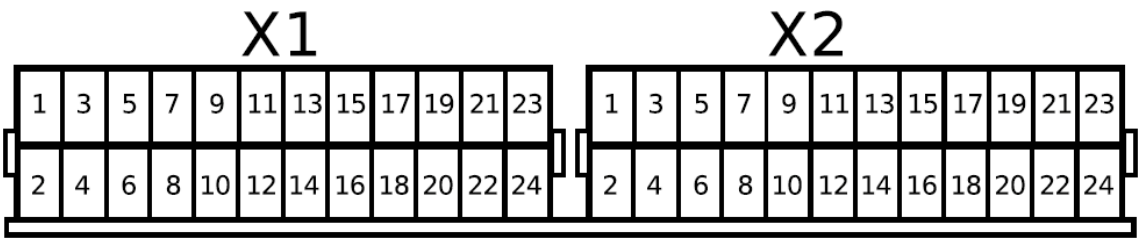

X1					
No.	Dir	Id.	Id.	Dir	No.
2		A2	A1		1
4		A4	A3		3
6		A6	A5		5
8		A8	A7		7
10		A10	A9		9
12		A12	A11		11
14		A14	A13		13
16		A16	A15		15
18		A18	A17		17
20		A20	A19		19
22		A22	A21		21
24		A24	A23		23

X2					
No.	Dir	Id.	Id.	Dir	No.
2		B2	B1		1
4		B4	B3		3
6		B6	B5		5
8		B8	B7		7
10		B10	B9		9
12		B12	B11		11
14		B14	B13		13
16		B16	B15		15
18		B18	B17		17
20		B20	B19		19
22		B22	B21		21
24		B24	B23		23

33.4. Diagram

Pin strips

Connector terminals X1 are reproduced one-to-one on connector strip X4 in a 2.54mm grid.

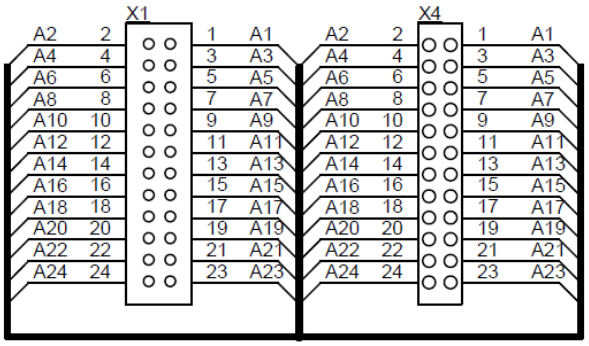

Connector terminals X2 are reproduced one-to-one on connector strip X5 in a 2.54mm grid.

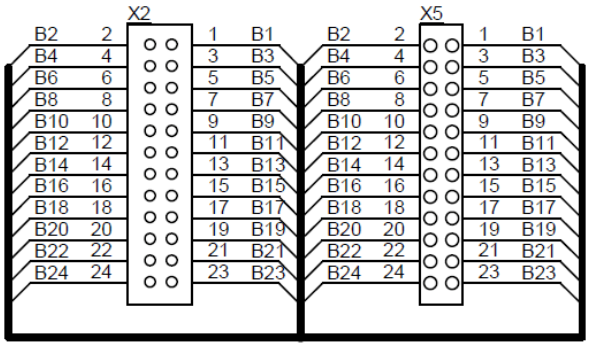

FPGA IOs

The IOs from FPGA are also reproduced on connector strips in a 2.54mm grid. Each 2x12 connector strip has 24 IOs.

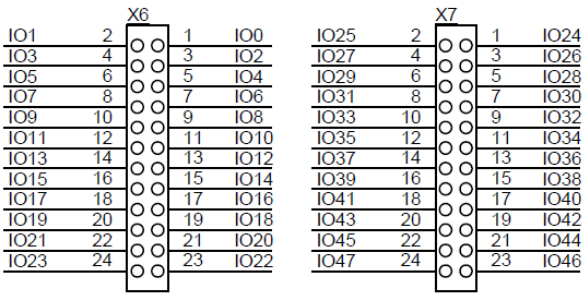

33.5. Available Options

Item Number	Label	Option	Description
611143700	COP-Proto-S6		Spartan 6 prototype board 48 IOs from FPGA, 3.3V CMOS, 2 x 24-pole connectors for Wago female connectors